Community Development Department

Lighting District

Supplemental Specifications for Traffic Signal Installation

April 2013

7000 Florida Street
Punta Gorda, Florida 33950
Tele: 941.575.3632
Fax: 941.575.3664

www.charlottecountyfl.com/CommunityDevelopment/Engineering

TRAFFIC SIGNAL INSTALLATIONS

Purpose
Workmanship
Qualification of Signal Contractor Personnel
Responsibility of Signal Contractor Personnel
Transfer of Maintenance
Concealed Work
Surface Treatments
- Noalox Anti-Oxidant Compound

ADDENDUM TO FLORIDA DEPARTMENT OF TRANSPORTATION SPECIFICATIONS

Mast Arm Structures/Foundations
Grounding
Conduit
Directional Bores and Driveway Crossings
- Standard E-Loc Couplings

Signal Cable
- Kellems Grips

Phase Wiring
Pull Box
- Box and Cover Description

Controller Pad and Controller Equipment
- Naztec Model 980 NEMA TS 2 Type 1 Signal Controller with Ethernet
- Naztec Model 516 MMUL-E-LCD Malfunction Management Unit
- Quazite Traffic Signal Cabinet Base

Signal Equipment
- Pelco Backplates Vacuum Formed & Flat ABS
- GELcore Traffic Signals
- Traffic Sign and Signal Cover Concepts
- Reinforcing Collar for Square Base
- Square Aluminum Traffic Signal Base

Electrical Service
- Square D 100-Amp Disconnect, Q0612L100RB

Loops
Optical Vehicle Detection
- Iteris Vantage Edge 2 Dual-Channel Processor
- Iteris Vantage Edge Connect
- Iteris Vantage RZ4 Advanced WDR Color Camera
- Pelco Camera Mounting Astro-Brac, Cable Mount AS-0175

System Auxiliaries
Internally Illuminated Signs
Fiber Optic Communications
Typical Layout of Conduit & Pull Box

CHARLOTTE COUNTY LIGHTING DISTRICT
SUPPLEMENTAL SPECIFICATIONS FOR TRAFFIC SIGNAL INSTALLATIONS

PURPOSE:

All work associated with the installation of a traffic signal shall conform to current Florida Department of Transportation (FDOT) Design Standards, Standard Specifications for Road and Bridge Construction, the most current edition of the Manual on Uniform Traffic Control Devices (MUTCD), the National Electrical Code (NEC) and/or the National Electric Safety Code (NESC), and this supplement. It is the intent of this supplement to detail installation requirements, dictated by the County, which exceed FDOT standards and NEC requirements. It is the Engineer of Record and Signalization Contractor's responsibility to note these extended specifications and to adhere to the methods and requirements mandated in this document.

WORKMANSHIP:

All work is to be performed in a workmanlike manner, and all OSHA and safety procedures shall be strictly followed and adhered to. It is the Contractor's responsibility to provide the labor, skilled in the appropriate areas, necessary to provide an acceptable and professional finished product. The Contractor and his personnel shall have, at all times, all necessary paperwork needed to complete the job. It is expected that plumb surfaces shall be plumb. Spacing of multiple components, such as conduit stubs or straps, shall be in equal increments. All materials shall be new.

All mast arm pole assemblies, pedestrian poles, and supplemental signal poles shall be leveled to the satisfaction of the Lighting District inspector.

The Charlotte County Lighting District inspector assigned to the project shall have the authority to make final determinations on whether workmanship, materials, and/or final product(s) meet the specifications contained herein.

Charlotte County reserves the right to redirect the termination point(s) of any or all conduit(s) from what is shown on the plans. If the quantity of materials is increased, the Contractor shall be compensated according to the per unit price of this change.

Charlotte County reserves the right to add to or delete from the overall quantity of pull boxes from what is shown on the plans. If the quantity of materials is increased, the Contractor shall be compensated according to the per unit price of this change.

QUALIFICATION OF SIGNAL CONTRACTOR PERSONNEL:

The contractor who is engaged in installing or maintaining traffic signals within Charlotte County shall have all work performed under the supervision of a traffic signal technician certified by the International Municipal Signal Association (I.M.S.A.) as a Level II, Traffic Signal Technician Construction and or Field. All cabinet-related work shall be performed by an International Municipal Signal Association (IMSA) Level II Technician,

certified in traffic signals. The technician's certification shall be presented at the pre-construction conference or upon request.

During all working hours, the Contractor shall have a responsible, English-speaking superintendent on the project with the capabilities and authority required by FDOT Specifications, Section 5-8.

Employees shall be trained in and familiar with the safety related work practices, safety procedures, and other safety requirements that pertain to their respective job assignments per OSHA Standard 1910 – Electrical and Federal Register 29 CFR Part 1926 Cranes and Derricks in Construction; Final Rule. Employees shall also be trained in and familiar with any other safety practices, including applicable emergency procedures that are not specifically addressed, but that are related to their work and are necessary for their safety.

Installation, maintenance, and repair of the County's fiber optic cable network shall be performed by fully trained and qualified technicians, who should possess BICSI ITS Level II certification.

RESPONSIBILITY OF SIGNAL CONTRACTOR PERSONNEL:

Charlotte County Lighting District Inspection staff shall be notified in writing either via form letter (To: Charlotte County Lighting District, 7000 Florida St., Punta Gorda, FL 33950) or e-mail (Andy.Amendola@Charlottefl.com) a minimum of 72 hours prior to the commencement of jobs that include overhead or underground work that will be conducted as part of construction or maintenance projects within the Charlotte County or State road right of way.

The Charlotte County Lighting District inspection staff shall be notified in writing either via form letter or e-mail (Pete.Casseday@Charlottefl.com) a minimum of 24 hours prior to any and all daily work to be performed throughout the entire length of construction or maintenance projects. Any changes that necessitate the rescheduling of work that has been previously scheduled shall be provided in writing via e-mail no later than the morning that it was to be performed.

For all new cabinet installations, it is recommended that the Signal Contractor allow the County an opportunity to bench test each new cabinet's operation at the County facility in Punta Gorda. If the Contractor provides the County with the materials, the County will install the video detection components into the cabinet. Charlotte County will deliver the controller cabinet and components to the job site when the Contractor is ready for installation. In return for allowing the County an opportunity to bench test the controller, the County will assist the Contractor in troubleshooting any problems upon initial startup.

For new traffic signals, conditional acceptance and inspection will be scheduled with Mr. Andrew Amendola of the Charlotte County Lighting District, 941.575.3648, before the

signal is placed in the normal operational mode. Notification is also required before placing the signal into flash mode.

Whenever an existing signalized intersection is replaced, a mast arm structure is added or replaced, or major construction activities occur, as deemed by the Charlotte County Lighting District, the changeover to the new equipment shall only occur on a Tuesday, Wednesday, or Thursday and shall not precede a holiday.

All new traffic signal installations shall flash for a minimum of 48 hours prior to the beginning of the "48-Hour Test."

The Contractor shall submit cut sheets on all materials proposed for the installation of a traffic signal. The material submittal will be reviewed by Charlotte County for conformance and returned to the Contractor within five business days.

TRANSFER OF MAINTENANCE:

Once the Contractor has begun any work on any portion of the project, all traffic control devices, including interconnect, within the project limits of this contract shall become the full responsibility of the Contractor.

Charlotte County will not grant any outside party access into the intersection controller cabinet. Should an outside party require access into the intersection controller cabinet; the outside party will be required to execute a Transfer of Maintenance Form. The Transfer of Maintenance Form is available upon request from the Charlotte County Lighting District. Once executed by the requesting party and Charlotte County, the door lock(s) will be changed, granting the requesting party access. Once the requesting party has satisfied the need for access, the same Transfer of Maintenance Form shall be completed, signifying transfer back to the County.

Whenever a new traffic control device is to be installed at a location where no device exists, the installing Contractor will assume full responsibility for the maintenance of said device from the time of activation of the device until such time as a final inspection is completed by the County and the installation is accepted.

Should a signal malfunction occur, the Contractor shall respond within two hours of notification and repair the traffic signal so that it is operating in a safe manner. The Contractor shall be responsible for the permanent repair and shall notify the County of the completion of the repairs within 24 hours. If the Contractor fails to respond within two hours, the County reserves the right to either repair the malfunction or employ alternate personnel and charge all costs incurred by Charlotte County to the Contractor. Authorized Charlotte County personnel may, at any time, enter the controller cabinet in order to restore any and all signal equipment to proper operation, if the malfunction or non-function of such equipment poses a hazard or inconvenience to motorists or pedestrians. Such authorized entry may occur at any time within the period of the contract, and such authorized entry shall in no way relieve the Contractor or manufacturer of his respective warranties.

The Contractor shall be responsible for coordinating with all utilities having overhead or underground facilities in close proximity or possible conflict with the Contractor's excavations and underground cable installation. The Contractor shall notify all utility companies and maintaining agencies 72 hours in advance of commencing work. Hand digging will be required in all areas where the utilities stake or locate a possible conflict or where hand digging is specified on the plans. The exact location of utilities shall be determined by the Contractor, when necessary, during construction.

Traffic shall be maintained in accordance with the "Manual on Uniform Traffic Control Devices" and "Roadway and Traffic Design Standards" and as designated in the plans. In addition, the Contractor shall schedule work in such a manner that signal coordination is maintained throughout the course of the project at locations where the County requires existing coordination to be maintained. Coordination may temporarily be accomplished through the use of time-based coordination (TBC), where applicable, but in no case shall uncoordinated operation exceed a period of 24 hours. Existing signalization shall remain in place to the longest extent possible and shall be used for maintenance of traffic as required. The Contractor shall maintain vehicle detection at each signalized intersection, for the duration of the project, utilizing optical or inductive methods. The use of microwave detection devices is unacceptable. The maintenance of existing signals, until removed, shall be the responsibility of the Contractor.

Except as approved by the County, there will be no lane closures or signal shutdowns during the following periods:

- Monday through Friday, from 7:00 a.m. until 9:00 a.m. and from 4:00 p.m. until 6:00 p.m., or as specified on the local agency permit documents.

- The Contractor will be permitted to work in the roadway during all other periods, unless informed otherwise by the County. In no case shall the Contractor close more than one lane without approval of the County.

It is recognized that signal shutdown will sometimes be required, such as when installing a new controller. During times when signal shutdown is required, the Contractor shall be responsible for furnishing uniformed Law Enforcement Officers to direct traffic.

All construction that includes integration of fiber optic communications or incident management video will be completed as turnkey items. Turnkey shall include integration into the Traffic Management Center located at 7000 Florida Street, Punta Gorda. The Lighting District will supply all necessary IP addresses, VLAN information, etc., to enable the equipment to be connected to, and communicate with, the fiber optic communications network and the Traffic Management Center.

CONCEALED WORK:

Any work which will not be readily visible upon completion shall not be concealed until a County Lighting District inspector gives approval. In the event the below items are concealed, it will be the Contractor's responsibility to expose them for the inspector's approval, at no additional cost to the County. This includes, but is not limited to:

- Buried or imbedded conduit
- Ground wire, rods, and array
- Loops and homeruns
- Leveling nuts before grouting
- Loop splices before encapsulating

SURFACE TREATMENTS:

The application of the following materials to various traffic signal components shall be performed during assembly:

- Threaded Hardware:
  All non-electrical threaded hardware (i.e., all Astro Brac hardware, pole hardware, or any threaded surface) shall be coated with Ideal Noalox Anti-Oxidant Compound or County-approved equivalent. The amount of Noalox applied shall be sufficient to be visible.

- Gasketing Surfaces:
  All gasket surfaces shall be lightly coated with County-approved silicone grease.

- Electrical Connections:
  All mechanical/electrical connections shall have the various components of the splice or termination coated with a County-approved oxide inhibitor.

- Galvanized Surfaces:
  All scratches and field-drilled holes shall be treated with a cold galvanizing compound.

- Weatherproofing:
  Irregular mating surfaces shall be rendered weatherproof by applying an appropriate bead of clear silicone caulk, such as Silicone II or County-approved equivalent. These areas include serrated signal couplings, controller cabinet foundation, pedestrian push buttons, and any other areas typically prone to moisture infiltration.

- Cable Entry/Exit:
  Wherever a cable enters or exits a field-drilled hole, the hole shall be protected by a permanently-installed rubber grommet.

ADDENDUM TO FLORIDA DEPARTMENT OF TRANSPORTATION SPECIFICATIONS

All new signalization projects shall utilize mast arm structures. The Engineer of Record shall represent seven directionally-drilled conduits under three of the four legs of any intersection. A typical conduit and pull box layout is included within this document, and designers should follow this typical as close as possible.

MAST ARM STRUCTURES/FOUNDATIONS:

All mast arm and monotype structures shall be manufactured to comply with FDOT Standard Drawings, Indexes 17741 through 17746. The mast arm poles shall include the "optional terminal compartment." The Standard Drawing Indexes shall be included within all signalization plans. The Engineer of Record shall calculate and sign/seal all dimensions which deviate from standard mast arm structure sizes. Mast arm assembly shop drawings must be submitted prior to any new mast arm pole installation. All shop drawings must be FDOT approved and shown on the Qualified Product List (QPL) index.

Under certain circumstances at existing signalized intersections, roadway improvements conflict with existing signal support structures. When this conflict occurs, relocating existing mast arm structures onto a new foundation will not be acceptable. These types of conflicts will require complete mast arm structure and foundation replacement.

The Contractor shall notify the County a minimum of 24 hours prior to pouring concrete. In addition, the Contractor shall provide an FDOT-certified testing lab for the concrete and shall forward all results to the Charlotte County Lighting District. For County projects only, Charlotte County will provide testing of the concrete at no additional cost to the Contractor. No drilling shall begin until the Contractor has supplied a drill shaft plan to the County, and it has been approved.

The mast arm shall not be attached to the mast arm pole until the concrete achieves the strength specified by the pole manufacturer's Engineer of Record. Mast arms shall be installed in accordance with the manufacturer's shop drawings and will not be erected without the required loading. It is the Contractor's responsibility to verify that the mast arm foundation(s) is installed at the correct location and to the correct elevation(s), as denoted on the plans. It is the Contractor's responsibility to verify the bolt projection from the concrete. Cutting off excess anchor bolt material is unacceptable. Hitting mast arm anchor bolts to straighten them, for any purpose, will not be accepted.

The mast arm foundation shall have a minimum of three (3) - 2" inch PVC conduits and one (1) - 3/4" inch PVC conduit used for the pole grounding. Spare conduit(s) shall be brought to the nearest pull box and have a pull string installed.

It is the Contractor's responsibility to contain all removed spoil from the foundation drilling process. All drainage facilities shall be properly protected from the foundation

hole spoil (i.e., hay bales, silt fence, etc.). In the event that drainage facilities become filled with spoil as a result of the foundation's excavation, it shall be the Contractor's responsibility to have the material removed and restored to the original condition. It shall be the Contractor's responsibility to return the mast arm foundation location to the original condition, including sod.

GROUNDING:

The minimum size of all ground/bond wire will be stranded #6 AWG. Bare wire will not be accepted inside a conduit. Ground wire shall be attached to the ground rod by means of a grounding acorn with a hex bolt. Exothermic bonding of ground wire to ground rods will not be accepted. Multiple conductors shall not be joined together under a grounding acorn. One conductor shall be terminated under the acorn, and all others shall be joined with a split bolt.

All ground rods shall be sectional, 5/8" inch x 10' feet, copper clad, bonded to a steel core. Forty (40) feet shall be installed at the signal controller cabinet, forty (40) feet at the electrical service pole, and twenty (20) feet at all signal and pedestrian poles.

All separately grounded elements at an intersection shall be bonded together to form an intersection grounding network. AWG #6 wire, with continuous green insulation, shall be used to form the grounding network.

All exposed, aboveground metal conduit shall be properly grounded with a grounding bushing or clamp.

CONDUIT:

All conduit and fittings shall be utilized for the purpose designed. There shall be no fabrications of non-standard sweeps by "cutting up" a standard sweep. Heat-bending PVC conduit is acceptable. No conduit shall be filled beyond the capacity stated in the National Electrical Code. PVC conduit stubs into the controller cabinet shall be plumb and evenly distributed. Spare conduits shall be brought to the nearest available pull box. All PVC conduits shall be joined together with integral deep bell ends and special long line couplings. Controller cabinet PVC stubs are to be the following sizes:

- 3/4" inch - ground
- 1 1/4" inch - service (PVC in cabinet)
- 4" inch – between pull boxes at cabinet and Quazite controller base.
- 2" inch - all others

Duct seal shall not be used for sealing conduit ends. Conduit ends shall be notched to allow the right angle exit of the associated conductors, and the conduit shall be capped with a removable PVC pressure cap.

All underground signalization conduits shall be schedule 40 PVC, gray in color, sectional or continuous. All unused conduits shall have one #14 AWG–XHHW insulated wire installed into them.

All exposed, aboveground conduit shall be heavy-wall, galvanized rigid conduit. All threaded rigid conduit connections shall be coated with anti-seize lubricant.

All signalization, fiber-optic, and lighting conduits shall be placed at a minimum depth of thirty six inches (36”) to a maximum one hundred twenty inches (120”) of cover. Exceptions may be made by the authority of the Charlotte County Signal Inspector for good cause shown. If conduits cannot be placed at a thirty six inch (36”) minimum depth due to underground conflicts (i.e., rocks, roots, culvert pipes, etc.), the Contractor shall contact the Charlotte County Signal Inspector to receive authorization to place conduits as less than thirty six inches (36”).

DIRECTIONAL BORES AND DRIVEWAY CROSSINGS:

All road crossings shall be accomplished by means of a directional bore. The Contractor shall provide Charlotte County with a directional bore log(s) taken at 10’ foot intervals for all directional bores. The Contractor shall provide the appropriate manufacturer fittings when switching from HDPE continuous conduit to standard PVC. Examples of appropriate couplings are Etco Specialty Products and E-Loc couplings.

Conduit for the purpose of fiber optic communications that will be installed by means of a directional drill shall be 2” inch continuous HDPE, SDR 13.5, colored orange pipe.

Conduit for the purpose of signalization that will be installed by means of a directional drill shall be 2” inch continuous HDPE, SDR 13.5, colored gray pipe.

The depth of any directionally drilled conduit shall not exceed one hundred twenty inches **(120”)**. Charlotte County reserves the right to reject any conduit(s) placed greater than one hundred twenty inches **(120”)** deep. Should a need arise where a depth greater than one hundred twenty inches **(120”)** becomes required, the contractor shall contact the Charlotte County Signal Inspector to receive authorization to place conduits greater than one hundred twenty inches (120”).

The Contractor will be responsible for cleaning up the spoil and returning the site to its original condition after the bore operation is complete. All drainage facilities shall be properly protected (i.e., hay bales, silt fence, etc.) from directional bore spoil. In the event that drainage facilities become filled with spoil as a result of the directional bore, it shall be the Contractor’s responsibility to have the material removed and the facility returned to its original condition.

SIGNAL CABLE:

All signal cable shall be IMSA Specification 19-1, stranded #14 AWG.

The terminal compartment of each mast arm pole shall be fed with a 16-conductor cable. Mast arm poles with twin arms shall be fed with two 16-conductor signal cables. All of the signal conductors shall be terminated onto terminal blocks with a minimum spacing of .562 inches.

One five-conductor signal cable shall be installed continuous between each three-section traffic signal display and the terminal block.

One seven-conductor signal cable shall be installed continuous between each five-section traffic signal display and the terminal block.

One seven-conductor signal cable shall be installed continuous between any pedestrian signal phase and the terminal block.

One IMSA Spec. 50-2, shielded, stranded, #14 AWG cable shall be installed continuous between the controller cabinet and each pedestrian push button.

All spare conductors shall be grounded in the controller cabinet at the neutral/ground bus and labeled as to the appropriate cable. Spares that do not fit into the neutral/ground bus shall be placed into a solderless lug and attached to the cabinet shell. Spare conductors connected together with a wire nut and a “pig tail” going to the neutral/ ground bus will not be accepted. Any spare conductors present in signal or pedestrian equipment must be isolated from neutral. These conductors shall be placed on an unused section of terminal strip or grounded to shell ground with an appropriate lug.

The signal cable shall have a vertical support at the top of each mast. The use of Kellems Grips or County-approved equivalent, sized for each cable, shall be used.

All pull boxes shall contain sufficient slack signal cable, which will extend a minimum of 3’ feet above the top of the pull box.

PHASE WIRING:

Each vehicle movement shall be wired separately and combined in the controller cabinet to obtain a specific sequence of operation, as shown on the plans or as directed by the County. Wherever applicable, or as otherwise specified by the County, the controller assembly will be wired with signal head numbering and vehicle phasing per Index No.17870 of the Roadway and Traffic Design Standards, and directionally oriented as follows:

A. When Major Arterial is a North/South direction:
- Southbound vehicle movements = Controller phase two
- Northbound vehicle movements = Controller phase six
- Eastbound vehicle movements = Controller phase eight
- Westbound vehicle movements = Controller phase four

B. When Major Arterial is an East/West direction:
- Southbound vehicle movements = Controller phase eight
- Northbound vehicle movements = Controller phase four
- Eastbound vehicle movements = Controller phase six
- Westbound vehicle movements = Controller phase two

PULL BOX:

All pull boxes shall be traffic-rated (20K minimum), fiberglass-reinforced concrete, as manufactured by Quazite, part #PG173OBA12 (box) and #PG173OHA_ _ (lid). The last two digits left blank are for the lid logo and shall be filled in by the Contractor for the specific lid logo required. Stacking of pull boxes will not be permitted. When a pull box is installed for the purpose of housing communications cable, the pull box shall be traffic-rated, fiberglass-reinforced concrete, as manufactured by "Quazite, part #PG2436BA24 (box) and PG2436HA_ _ (lid). The last two digits left blank are for the lid logo and shall be filled in by the Contractor for the specific lid logo required. All pull boxes shall be used for a single, dedicated function and shall not carry cables of varying functions.

Placement shall be in accordance with FDOT Design Standards; however, preference is to locate pull boxes in sidewalk areas, if job conditions permit. The pull boxes shall have the FDOT APL number embossed in the cover, and the interior of the box shall be stenciled with the APL number. All pull boxes shall have cover logos identifying their specific purpose. These shall be as follows:

- COMMUNICATIONS — interconnect
- TRAFFIC CONTROL — all loop or video detection functions
- TRAFFIC SIGNAL — all signal functions

All pull boxes shall have a concrete apron poured around them. The concrete apron shall extend 18" inches beyond the edges of the pull box in all directions. The concrete apron may be reduced to 6" inches between adjacent pull boxes. The concrete apron shall have a minimum thickness of 4" inches. The top of the pull box and concrete apron shall be equal to the final elevation. Concrete apron is to be included in the cost of each pull box.

CONTROLLER PAD AND CONTROLLER EQUIPMENT:

The traffic signal controller base shall be fiberglass-reinforced concrete, as manufactured by Quazite, part #PB40581224B24. The traffic signal controller base shall be set upon one foot of crushed stone (57 Rock). The crushed stone shall extend a minimum of one foot beyond all edges of the pad. The fill dirt around the remaining portions of the controller pad shall be compacted with a plate tamper, to the County's approval. The elevation of the controller cabinet foundation shall be equal to, or greater than, the crown of the road. No pre-formed concrete cabinet pads will be accepted.

Under no circumstances shall the signal controller cabinet pad be core-drilled, nor will any cabinet exterior shell be drilled, punched-out, or otherwise become compromised to allow conduit entry points. In the event existing entry points will not accommodate the proposed improvements, complete signal controller base replacement will be required. The replacement traffic signal controller base shall be fiberglass-reinforced concrete, as manufactured by Quazite, part #PB40581224B24.

The controller shall be a Naztec Model 980 NEMA TS2, Type 1 signal controller with an Ethernet port. The malfunction Management Unit shall be manufactured by Naztec, part #MMU516L-E-LCD. The controller cabinet shall be a two-door, Type 6, with the capability of operating an S.O.P. 10. The cabinet shall operate in the TS-2, Type 1 environment and be manufactured by Transportation Control Systems, Part #TCS5-8-Charlotte. The controller cabinet shall be provided with a minimum of four spare BIU's. Each cabinet shall contain an Ethernet switch, the specifications of which are detailed below. When the signal plans specify that luminaries be placed atop the mast arm pole, a lighting contactor shall be used. The lighting contactor shall be manufactured by Square D, part #8910DP32V02. Power for the luminaires shall be on a dedicated circuit from the service disconnect. The light fixtures shall share the photocell from the sign panel.

SIGNAL EQUIPMENT:

All signal heads shall be TCT, Eagle Mark Five, or other County-approved equivalents with tunnel visors. Plastic/polycarbonate signal heads are not acceptable. All signal heads shall have back plates. The back plates shall be constructed from vacuum-formed plastic and mounted with the manufacturers supplied hardware. All signal indications shall be L.E.D., as manufactured by GE Luminations or County approved equivalent.

Standard (no terminal compartment) "Astro-Brac" signal mounting systems--using stainless steel wire rope bands, as manufactured by Pelco Products--shall be used throughout and installed to the manufacturer's installation instructions. All signal assemblies shall have tube caps installed and the excess tube cut off.

Protected and through movement signal displays shall be placed in the center of the lane, as required by geometrics. Five section signal heads shall be placed on lane line, as required by geometrics.

Five-section signal heads shall have a serrated locking spacer ring installed on the arrow side of the signal head. The doors of a five-section signal head shall open away from each other (i.e., the wing nuts are between the two sections). A terminal strip shall be added to the red circular indication of the five-section cluster. The wire connection for the red indication shall be made on this terminal block.

All dark signal indications shall be covered with covers manufactured by Traffic Sign and Signal Cover Concepts or other County-approved equivalents.

All pedestrian heads shall be single-section, with international symbols. The pedestrian signal indications shall be full-hand and full-man L.E.D., as manufactured by GE Luminations. Pedestrian signals are to include explanatory international signage, with arrows. Pedestrian signal poles and ground-mounted, nearside traffic signal poles shall be mounted using Pelco part #PB 5335 base assemblies. The minimum size for all nearside or pedestrian foundations shall be 24" inch round x 30" inch deep. These base assemblies must be equipped with Pelco part #PB 5325 pole and base collar

assemblies. The pedestrian pushbutton shall be a Pelco part #SP-1090-FL. All aluminum poles shall have a spun finish. This pole shall be grounded by means of a solderless lug. All poles which require threads (i.e., to mount pedestrian pushbuttons, pedestrian signs, etc.) shall be drilled and tapped. No Nutserts products will be accepted.

ELECTRICAL SERVICE:

Electrical service shall be installed in accordance with NEC and FDOT Design Standards, with the following enhancements:

When replacing any electrical power service, all work shall be completed in one day, and the signal shall be made fully operational by the end of the Contractor's workday.

A 30-ampere breaker will be installed for the electrical power service, unless a current requirement for normal operation of the signalized intersection exceeds 25 amperes. As a minimum, the breaker for the electrical power service shall exceed the current requirements for normal operation of the signalized intersection by 25 percent.

No nails or small screws shall be used to mount the electrical disconnect or straps in place. All fastening devices shall be screws, sleeve anchors, or lag bolts, 5/16" inch x 2" inch or larger.

The electrical service shall be installed onto a 26' foot concrete service pole. All new electrical service points for traffic signals and arterial monitoring camera locations shall be metered. The meter enclosure shall be a lever-type bypass meter socket rated at 125 amp minimum. An oval eye shall be installed at the top of the pole for FPL to attach to. The electrical service disconnect and breaker shall be manufactured by Square D Company. The service disconnect part number shall be QO612L100RB or an approved equivalent. All service wire is to be #6 AWG minimum. The service neutral wire shall have continuous white insulation. Riser conduit size from the disconnect shall be 1¼" inch rigid. After the wire leaves the weather head, the wire shall have a minimum of ten turns to form a coil, with a minimum of 3' feet of wire past that point. Meyers hubs shall be used for all conduits exiting the electrical service disconnect. The 1¼" inch service feed may be changed to PVC 18" inch below grade. All conduits shall be mounted on channel systems, such as B-Line or Kindorf.

A pull box shall be included at the base of each service pole. The pull box shall be a common point between the electrical service, uninterruptible power supply (UPS), and the signal controller cabinet.

LOOPS:

All existing loops which do not meet the optical video requirements shall be sealed with an FDOT-approved, epoxy-type loop sealant. No hot tar or other heated sealants will be accepted. Wire type shall be AWG #14, stranded with XHHW insulation. A router saw will not be permitted to cut slots for the loop(s) in the finished surface of the asphalt. The loop window shall not be placed on a radius. All loops shall have a

soldered connection between the loop wires and the homerun Beldon cable. The soldered connections shall be covered with a wire nut and placed into a County-approved, watertight enclosure.

When an intersection plan details dilemma zone detection, standard inductive loops shall not be utilized. Dilemma zone detection shall be accomplished by means of the Wavetronic Smart Sensor Advance, model 200. The Smart Sensor units shall be mounted to the mast arm by means of Pelco Astro Brac, with stainless steel rope cables.

OPTICAL VEHICLE DETECTION:

Optical vehicle detection is Charlotte County's standard for traffic signal actuation. All new intersections shall utilize video detection on all approaches. Any modification to existing intersections with inductive loops, which necessitate replacement of 50% or greater vehicle detection zones (excluding system loops in the calculation), shall be converted entirely to video detection. If less than 50% is being replaced, inductive loops can be used.

All vehicle detection modules shall be Iteris Vantage Edge 2 dual input video processors, along with one Iteris Edge Connect quad-view remote communications module. All cameras shall be Iteris Vantage RZ4 Advanced Wide Dynamic Range color camera assemblies. The camera(s) shall be wired with a combination video/power cable, as manufactured by Isotec. The camera(s) shall include Edco Model RMCX1.06M - video detection suppression with a BNC pig tail. The video detection surge panel and power panel components shall be DIN rail mountable. All cameras shall be mounted on a Pelco mast arm camera bracket, part #AB-0175-5-96-ALO. Attached to each camera bracket shall be a Lighting Master lightning dissipater, part #LM-CT-36-VHB. The system shall come equipped with a minimum 7" inch color LCD monitor, approved by the manufacturer of the video detection system.

The system installer shall leave a minimum of 12" inches of spare cable at each camera bracket to neatly form a cable-tied loop to the camera. All manufacturer installation instructions and tools shall be used.

SYSTEM AUXILIARIES:

- Uninterruptible Power Supply (UPS):
  All newly installed traffic signals shall have an Uninterruptible Power Supply (UPS). The UPS will provide battery backup capabilities to signalized displays only during power outages. The UPS cabinet shall be wired to isolate the load of the illuminated street name sign(s), when in use. This transfer shall occur automatically when battery backup power is required. During the course of any project, when complete signal cabinet assembly replacement becomes necessary, the inclusion of a UPS system shall be required. The UPS controller shall be manufactured by PowerBack, model #PB-2000ITS, with an Ethernet communications port included. The PowerBack controller shall be installed within an aluminum enclosure wired for this specific purpose, as manufactured by

Transportation Control Systems, part #PS2000PiggyW/Charger. The complete assembly shall have a Florida Department of Transportation Approved Product List (APL) number. All UPS cabinets shall be installed onto a 12' foot overall length electrical service pole or upon the concrete service pole. The Lighting District inspector assigned to the project will determine exact pole location in the field. The bottom of the cabinet shall not exceed 3' feet above finish grade.

- Ethernet Switch:
  An eight-port managed Ethernet switch with six, Base 10/100, Base TX ports shall be furnished and installed in each controller assembly. Each switch shall have two 100 Mbps fiber optical Ethernet ports for use with a single-mode, 1310nm standard "SC" connector. The unit shall carry a five-year warranty, applicable to design and manufacturing product defects. The Ethernet switch shall be a "RuggedSwitch" model #RS900-HI-D-C2C200. Each traffic signal and/or arterial monitoring cabinet shall have "Transient Voltage Surge Suppression" for the Ethernet switch. The 120 VAC power to the Ethernet switch shall be wired to an advanced three-stage hybrid, solid-state power line protector (load side). The power line protector (line side) shall be connected to the controller assembly, power panel, and 15-amp auxiliary breaker. Wire connections to the power line protector shall be made with compression-type screw terminations. The power line protector shall be an "EDCO" model "HSP121BT-1RU" or County-approved equivalent.

- Arterial Monitoring Camera:
  When an arterial monitoring camera(s) is shown on the plans, the Signal Contractor shall furnish and install a "Bosch AutoDome 700 Series IP PTZ Camera, part VG5-724-ECE2. The camera shall be mounted upon an AutoDome pendant arm part #VG4-A-PA0. If the plan depicts a camera to be installed upon a mast arm assembly, the camera shall be mounted utilizing a Bosch roof parapet arm, part # VGA-Roof-Mount, pipe mount cap, Part #VG4-A-9543, and a Pelco Triton Astro Brac, part #AB-3040-110. The camera shall be powered by an Altronix plug in transformer, 24 VAC, 40 VA (1.67 amp) output, part #TP2440 or County approved equivalent. The camera shall be connected by means of a jelly filled, Category 6 cable suitable for direct burial.

  The arterial monitoring or traffic signal cabinet shall be fully protected with Atlantic Scientific Corporation surge protection devices. The cabinet shall be fully protected with a Zone Master 150,120/240, model #11214. The cameras Ethernet cable shall be protected using Citel Din Rail Mount Data Surge Protection, part #MJ8-CAT5E. The camera power shall be protected utilizing Citel Din Rail Mounted 24 volt DC Power Surge Protector, part #DS220S-24DC.

  The camera shall be mounted on a 50' foot overall length concrete pole. Arterial monitoring camera poles, not tied into a traffic signal cabinet, shall utilize a Type 336S cabinet. The cabinet shall be pole mount with sunshields, as manufactured by Southern Manufacturing, part #WE336S-Charlotte-P-SS.

INTERNALLY ILLUMINATED SIGNS:

All internally illuminated street name signs shall be two-sided and mounted on a galvanized**,** clamp-on, cantilevered arm. If the mast arm assembly is painted, the cantilevered arm shall be colored to match the pole assembly. Transportation Control Systems of Tampa, Florida, shall manufacture all illuminated street name signs. Illuminated street name signs shall utilize fluorescent tubes as the light source. All sign housings shall be 4' feet, 6' feet, or 8' feet in length. All sign faces shall have a 1" inch white border around the entire sign. The photocell for the sign(s) shall be located inside the controller cabinet. The photocell shall be mounted on a separate panel and be wired so that an on/off/auto switch can be utilized by maintenance personnel. A 2" inch hole, covered with Plexiglas, shall be installed in the controller cabinet. All signs shall have one breaker specifically for the illuminated street name sign located on the power panel, which shall be labeled accordingly. Power shall be supplied to the illuminated street name sign by means of a five-conductor signal cable.

FIBER OPTIC COMMUNICATIONS:

The Charlotte County Lighting District has published fiber optic specifications, which are available upon request. Fiber optic communications relating to the City of Punta Gorda/Charlotte County Advanced Transportation Management System (ATMS) are of the utmost priority and shall be maintained at all times. Any interruptions to communications due to cable cuts shall be restored within five business days of the initial interruption. In the event a fiber optic cable is cut or damaged, a splice will not be permitted. The fiber optic cable shall be completely replaced from point to point. Point to point is defined as the closest original point where the cables were fused together after being completely cut in half or the closest end termination within the run. The Charlotte County Lighting District shall coordinate all repairs to the fiber optic system utilizing County vendors currently on contract to make such repairs. In the event conduit damage occurs, the use of split duct pipe will not be accepted. The responsible party shall be liable for all costs required to remove the fiber optic cable from the conduit; the necessary repairs to the conduit; and the re-installation of the fiber optic cable, including any terminations and splices.

Under no circumstances shall the main fiber optic trunk or fiber optic section cable enter the signal controller cabinet. All fiber optic cable connections shall be accomplished by means of a "drop cable" off the trunk or section cable into the controller cabinet. The drop cable shall be terminated into a Corning Cable Systems enclosure, part #SPH-01P.

Prior to the installation of any fiber optic cable, the Contractor shall perform a pre- and post-installation test, as described within the Charlotte County Supplemental Specification for Fiber Optics at Traffic Signal Devices.

Noalox® Anti-Oxidant Compound

- Anti-oxidant and anti-seizing compound
- Reduces galling and seizing on aluminum conduit joints
- Suspended zinc particles penetrate and cut aluminum oxide
- Carrier material excludes air to prevent further oxidation
- Improves service life of aluminum electrical applications
- For use with all types of pressure-type wire connectors

Description	Cat. No.
1/2-oz. Tube	30-024
4-oz. Tube	30-026
8-oz. Squeeze Bottle	30-030
8-oz. Bottle with brush in cap	30-031
1-gal. Bucket	30-032
5- gal. Bucket	30-040
55-gal. Drum	30-1216

Couplings

Standard "E-Loc"®

Designed for use with smoothwall OD controlled innerduct (ASTM 3035), Sch. 40 and Sch. 80 innerduct, and is pressure tight to internal pressures above 200 psi when restrained or buried. Ideal for joining PE to PVC or threaded steel conduit.

Part No.	Size	Nom. O.D.	Std. Ctn. Qty.	Std. Ctn. Wt.
EL1.050	3 /4"	1.050"	50	19
EL1.315	1"	1.315"	50	46
EL1.660	1 1 /4"	1.660"	50	36
EL1.900	1 1 /2"	1.900"	25	28
EL2.375	2"	2.375"	25	40
EL3.500	3"	3.500"	25	48
EL4.500	4"	4.500"	25	67
EL5.563	5"	5.563"	10	34
EL6.00	6"	6.625"	12	40

Wagner Smith Equipment Company
Since 1917

Eastern/Central USA
800-666-6567 (817) 447-8085
Western USA
800-444-7064 (503) 692-0979

Tools and Accessories Rentals/Sales

Ask about our rental purchase plans! **Please note that not all accessory items are available for rent.**

Kellem's® Grips

(Sale Only)

[BACK]

The Wagner-Smith Company
921 S. Burleson Blvd., Burleson, TX 76028 USA

In our continuing effort to improve our equipment, all specifications and design features are subject to change without notice.

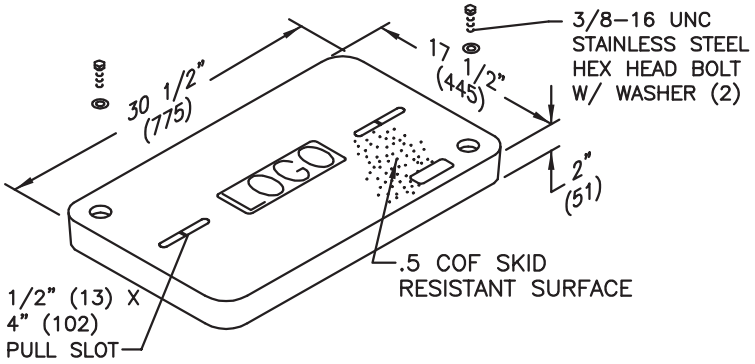

STANDARD COVER

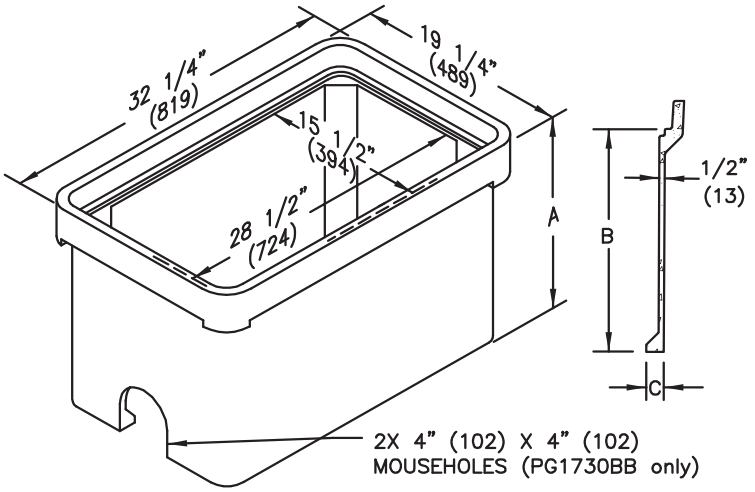

PG BOX

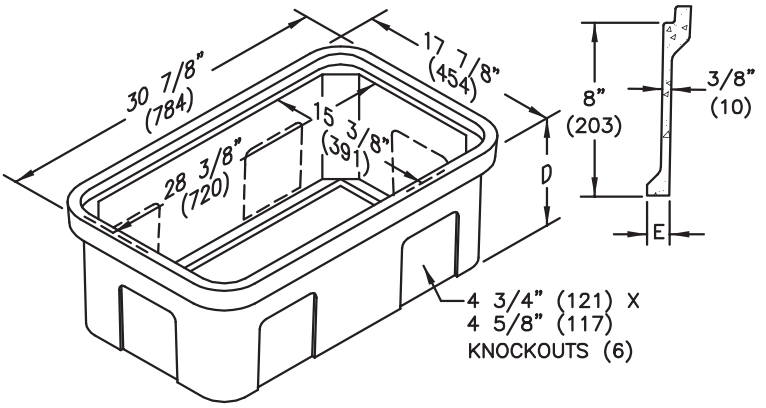

PG BOTTOM
EXTENSION

SPECIFICATIONS/DATA

17” x 30” PG Style (Stackable) Assembly

Covers (Blank unless logo is specified)

DESCRIPTION	PART NO.	WEIGHT #	DESIGN/TEST LOAD #	ANSI TIER
W/2 Bolts	PG1730CA00	52 (23.6 kg)	8,000 / 12,000	8
Gasketed w/2 Bolts	PG1730CG00	52 (23.6 kg)	8,000 / 12,000	8
No Bolts	PG1730WA00	52 (23.6 kg)	8,000 / 12,000	8
Heavy Duty w/2 Bolts	PG1730HA00	83 (37.6 kg)	15,000 / 22,500	15
Gasketed Heavy Duty w/2 Bolts	PG1730HG00	83 (37.6 kg)	15,000 / 22,500	15
Extra Heavy Duty w/2 Bolts	PG1730HH00	85 (38.6 kg)	22,500 / 33,750	15*

- Covers with meter lids available upon request.
- Gasketed covers and bolt grommets must be used with a gasketed box. Gaskets reduce the inflow of fluids but do not make the enclosure water tight.

* Loadings for HH covers comply with all test provisions of ANSI/SCTE 77 except that the vertical design load is 22,500 lbs. with a test load of 33,750 lbs. over a 10” x 20” plate.

PG Boxes (Stackable with self-aligning, replaceable EZ Nut) *22” - 30” deep boxes must be used as bottom of any stack

DESCRIPTION	PART NO.	WEIGHT #	DIMENSION A	DIMENSION B	DIMENSION C	DESIGN/TEST LOAD #	ANSI TIER
Open Bottom	PG1730BA12	67 (30.4 kg)	12” (305 mm)	10” (254 mm)	1 1/4” (32 mm)	22,500 / 33,750	15**
	PG1730BA18	94 (42.6 kg)	18” (457 mm)	16” (406 mm)	1 1/4” (32 mm)	22,500 / 33,750	15**
	* PG1730BA22	106 (48.1 kg)	22” (559 mm)	20” (508 mm)	1 1/4” (32 mm)	22,500 / 33,750	15**
	* PG1730BA24	122 (55.3 kg)	24” (610 mm)	22” (559 mm)	1 1/4” (32 mm)	22,500 / 33,750	15**
	* PG1730BA28	126 (57.2 kg)	28” (711 mm)	26” (660 mm)	1/2” (13 mm)	22,500 / 33,750	15**
	* PG1730BA30	144 (65.3 kg)	30” (762 mm)	28” (711 mm)	1/2” (13 mm)	22,500 / 33,750	15**
Open Bottom w/ Gasket	PG1730BG12	67 (30.4 kg)	12” (305 mm)	10” (254 mm)	1 1/4” (32 mm)	22,500 / 33,750	15**
	PG1730BG18	94 (42.6 kg)	18” (457 mm)	16” (406 mm)	1 1/4” (32 mm)	22,500 / 33,750	15**
	* PG1730BG22	106 (48.1 kg)	22” (559 mm)	20” (508 mm)	1 1/4” (32 mm)	22,500 / 33,750	15**
	* PG1730BG24	122 (55.3 kg)	24” (610 mm)	22” (559 mm)	1 1/4” (32 mm)	22,500 / 33,750	15**
	* PG1730BG28	126 (57.2 kg)	28” (711 mm)	26” (660 mm)	1/2” (13 mm)	22,500 / 33,750	15**
	* PG1730BG30	144 (65.3 kg)	30” (762 mm)	28” (711 mm)	1/2” (13 mm)	22,500 / 33,750	15**
Open Bottom w/ 2 Mouseholes	PG1730BB12	65 (29.5 kg)	12” (305 mm)	10” (254 mm)	1 1/4” (32 mm)	22,500 / 33,750	15**
	PG1730BB18	92 (41.7 kg)	18” (457 mm)	16” (406 mm)	1 1/4” (32 mm)	22,500 / 33,750	15**
	* PG1730BB22	104 (47.2 kg)	22” (559 mm)	20” (508 mm)	1 1/4” (32 mm)	22,500 / 33,750	15**
	* PG1730BB24	120 (54.4 kg)	24” (610 mm)	22” (559 mm)	1 1/4” (32 mm)	22,500 / 33,750	15**
	* PG1730BB28	124 (56.2kg)	28” (711 mm)	26” (660 mm)	1/2” (13 mm)	22,500 / 33,750	15**
	* PG1730BB30	142 (64.4 kg)	30” (762 mm)	28” (711 mm)	1/2” (13 mm)	22,500 / 33,750	15**
Solid Bottom	PG1730DA12	85 (38.5 kg)	12 1/2” (318 mm)	10” (254 mm)	N/A	22,500 / 33,750	15**
	PG1730DA18	112 (50.8 kg)	18 1/2” (470 mm)	16” (406 mm)	N/A	22,500 / 33,750	15**
	* PG1730DA22	124 (56.2 kg)	22 1/2” (572 mm)	20” (508 mm)	N/A	22,500 / 33,750	15**
	* PG1730DA24	137 (62.0 kg)	24 1/2” (622 mm)	22” (559 mm)	N/A	22,500 / 33,750	15**
	* PG1730DA28	143 (64.9 kg)	28 1/2” (724 mm)	26” (660 mm)	N/A	22,500 / 33,750	15**
	* PG1730DA30	150 (68.0 kg)	30 1/2” (775 mm)	28” (711 mm)	N/A	22,500 / 33,750	15**
Solid Bottom w/ Gasket	PG1730DG12	85 (38.5 kg)	12 1/2” (318 mm)	10” (254 mm)	N/A	22,500 / 33,750	15**
	PG1730DG18	112 (50.8 kg)	18 1/2” (470 mm)	16” (406 mm)	N/A	22,500 / 33,750	15**
	* PG1730DG22	124 (56.2 kg)	22 1/2” (572 mm)	20” (508 mm)	N/A	22,500 / 33,750	15**
	* PG1730DG24	137 (62.0 kg)	24 1/2” (622 mm)	22” (559 mm)	N/A	22,500 / 33,750	15**
	* PG1730DG28	143 (64.9 kg)	28 1/2” (724 mm)	26” (660 mm)	N/A	22,500 / 33,750	15**
	* PG1730DG30	150 (68.0 kg)	30 1/2” (775 mm)	28” (711 mm)	N/A	22,500 / 33,750	15**

** Loadings comply with ANSI/SCTE 77. These boxes and extensions meet and exceed ANSI Tier 15 test provisions.

PG 17” x 30” Extensions (For use under 12” & 18” deep boxes only, one per box. For grade adjustable extension see page 41.)

DESCRIPTION	PART NO.	WEIGHT #	DIMENSION D	DIMENSION E	DESIGN/TEST LOAD #	ANSI TIER
Open Bottom	PG1730EA08	36 (16.3 kg)	8 3/4” (222 mm)	1” (25 mm)	22,500 / 33,750	15**
Solid Bottom	PG1730RA08	55 (24.9 kg)	9 1/4” (235 mm)	N/A	22,500 / 33,750	15**

Dimensions & weights in parentheses are metric equivalent.

SPECIFICATIONS/DATA

24" x 36" PG Style (Stackable) Assembly and 24" x 36" PD Style Assembly

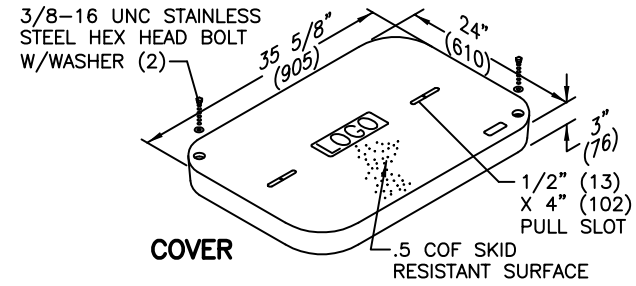

COVER

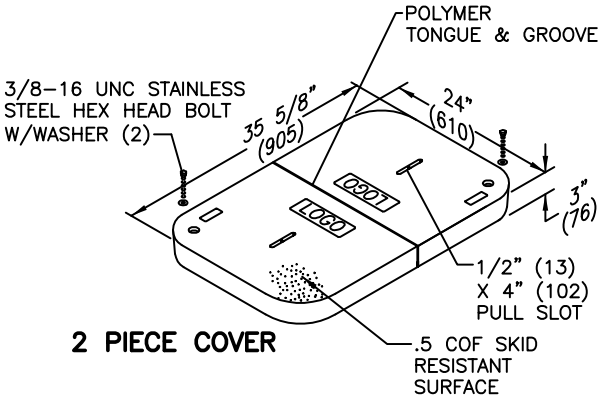

2 PIECE COVER

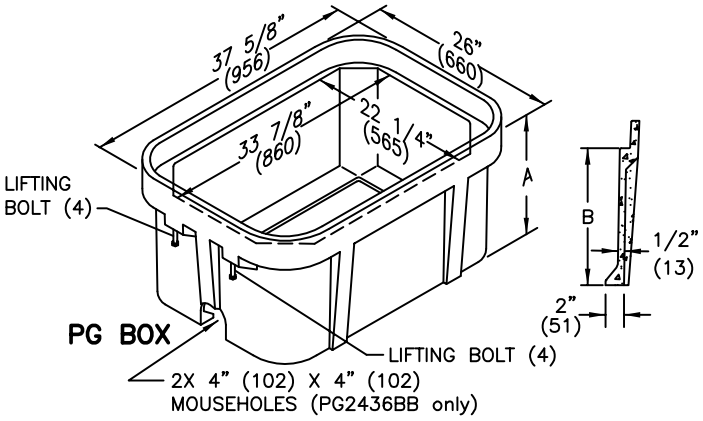

PG BOX

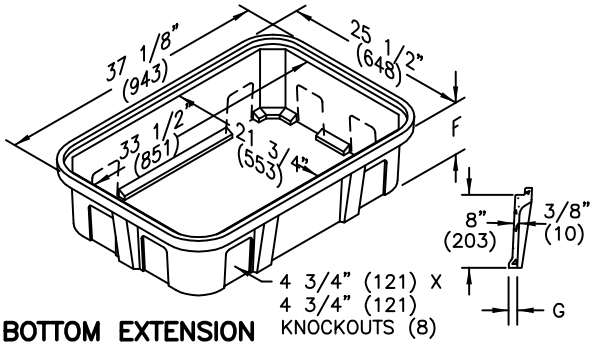

PG BOTTOM EXTENSION

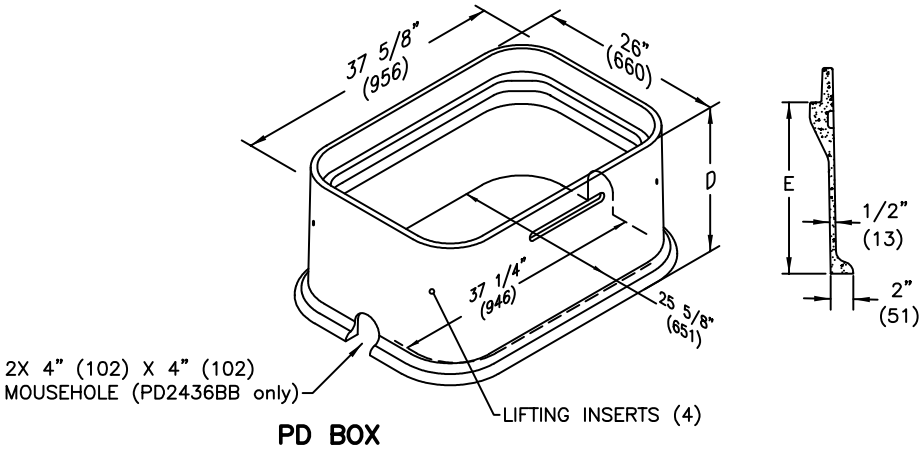

PD BOX

SPECIFICATIONS/DATA

24” x 36” PG Style (Stackable) Assembly and 24” x 36” PD Style Assembly

Covers (Blank unless logo is specified)

DESCRIPTION	PART NO.	WEIGHT #	DESIGN/TEST LOAD #	ANSI TIER*
W/2 Bolts	PG2436CA00	100 (45 kg)	8,000 / 12,000	8
Gasketed w/2 Bolts	PG2436CG00	100 (45 kg)	8,000 / 12,000	8
2-Piece w/2 Bolts	PG2436CS00	122 (55 kg)	8,000 / 12,000	8
No Bolts	PG2436WA00	100 (45 kg)	8,000 / 12,000	8
Heavy Duty w/2 Bolts	PG2436HA00	115 (52 kg)	15,000 / 22,500	15
Gasketed Heavy Duty w/2 Bolts	PG2436HG00	115 (52 kg)	15,000 / 22,500	15
Heavy Duty 2-Piece w/2 Bolts	PG2436HS00	122 (55 kg)	15,000 / 22,500	15
Heavy Duty w/2 Bolts	PG2436HH00	122 (55 kg)	22,500 / 33,750	22

- Covers with meter lids available upon request. See page 12 or page 56 for meter lid cover load rating explanation.
- Gasketed covers and bolt grommets must be used with a gasketed box. Gaskets reduce the inflow of fluids but do not make the enclosure water tight.

PG Boxes (Stackable with self-aligning, replaceable EZ Nut) **24” - 42” Deep boxes must be used as bottom of any stack.)

DESCRIPTION	PART NO.	WEIGHT #	DIMENSION A	DIMENSION B	DESIGN/TEST LOAD #	ANSI TIER*
Open Bottom	PG2436BA18	141 (64 kg)	18” (457 mm)	15” (381 mm)	22,500 / 33,750	22
	PG2436BA24	180 (81.6 kg)	24” (610 mm)	21” (533 mm)	22,500 / 33,750	22
	PG2436BA30	196 (88.9 kg)	30” (762 mm)	27” (686 mm)	22,500 / 33,750	22
	PG2436BA36	254 (115 kg)	36” (914 mm)	33” (838 mm)	22,500 / 33,750	22
	PG2436BA42	293 (133 kg)	42” (1067 mm)	39” (991 mm)	22,500 / 33,750	22
Open Bottom w/2 Mouseholes	PG2436BB18	139 (63.1 kg)	18” (457 mm)	15” (381 mm)	22,500 / 33,750	22
	PG2436BB24	178 (80.7 kg)	24” (610 mm)	21” (533 mm)	22,500 / 33,750	22
	PG2436BB30	194 (88.0 kg)	30” (762 mm)	27” (686 mm)	22,500 / 33,750	22
	PG2436BB36	252 (114 kg)	36” (914 mm)	33” (838 mm)	22,500 / 33,750	22
	PG2436BB42	293 (133 kg)	42” (1067 mm)	39” (991 mm)	22,500 / 33,750	22
Solid Bottom	PG2436DA18	171 (78 kg)	18 1/2” (470 mm)	15” (381 mm)	22,500 / 33,750	22
	PG2436DA24	228 (103.4 kg)	24 1/2” (622 mm)	21” (533 mm)	22,500 / 33,750	22
	PG2436DA30	238 (107.0 kg)	30 1/2” (775 mm)	27” (686 mm)	22,500 / 33,750	22
	PG2436DA36	282 (128 kg)	36 1/2” (927 mm)	33” (838 mm)	22,500 / 33,750	22
	PG2436DA42	321 (146 kg)	42 1/2” (1080 mm)	39” (991 mm)	22,500 / 33,750	22

PD Boxes

DESCRIPTION	PART NO.	WEIGHT #	DIMENSION D	DIMENSION E	DESIGN/TEST LOAD #	ANSI TIER*
Open Bottom	PD2436BA18	159 (72 kg)	18” (457 mm)	15” (381 mm)	22,500 / 33,750	22
	PD2436BA26	199 (90 kg)	26” (660 mm)	23” (584 mm)	22,500 / 33,750	22
	PD2436BA48	313 (142 kg)	48” (1219 mm)	45” (1143 mm)	22,500 / 33,750	22
Open Bottom w/2 Mouseholes	PD2436BB18	157 (71 kg)	18” (457 mm)	15” (381 mm)	22,500 / 33,750	22
	PD2436BB26	197 (89 kg)	26” (660 mm)	23” (584 mm)	22,500 / 33,750	22
	PD2436BB48	311 (141 kg)	48” (1219 mm)	45” (1143 mm)	22,500 / 33,750	22
Open Bottom w/Gasket	PD2436BG18	159 (72 kg)	18” (457 mm)	15” (381 mm)	22,500 / 33,750	22
	PD2436BG26	199 (90 kg)	26” (660 mm)	23” (584 mm)	22,500 / 33,750	22
	PD2436BG48	313 (142 kg)	48” (1219 mm)	45” (1143 mm)	22,500 / 33,750	22

Extensions (For use under 18” deep box only, one per box.)

DESCRIPTION	PART NO.	WEIGHT #	DIMENSION F	DIMENSION G	DESIGN/TEST LOAD #	ANSI TIER*
Open Bottom	PG2436EA08	81 (37 kg)	8 3/4” (222 mm)	1” (25 mm)	22,500 / 33,750	22
Solid Bottom	PG2436RA08	95 (43.1 kg)	9 1/4” (235 mm)	N/A	22,500 / 33,750	22

Dimensions & weights in parentheses are metric equivalent.

* Loadings comply with ANSI/SCTE 77 (see page 9).

Naztec, Inc.
ATMS Solutions

Model 980 NEMA TS2 Type 2 Signal Controller with Ethernet

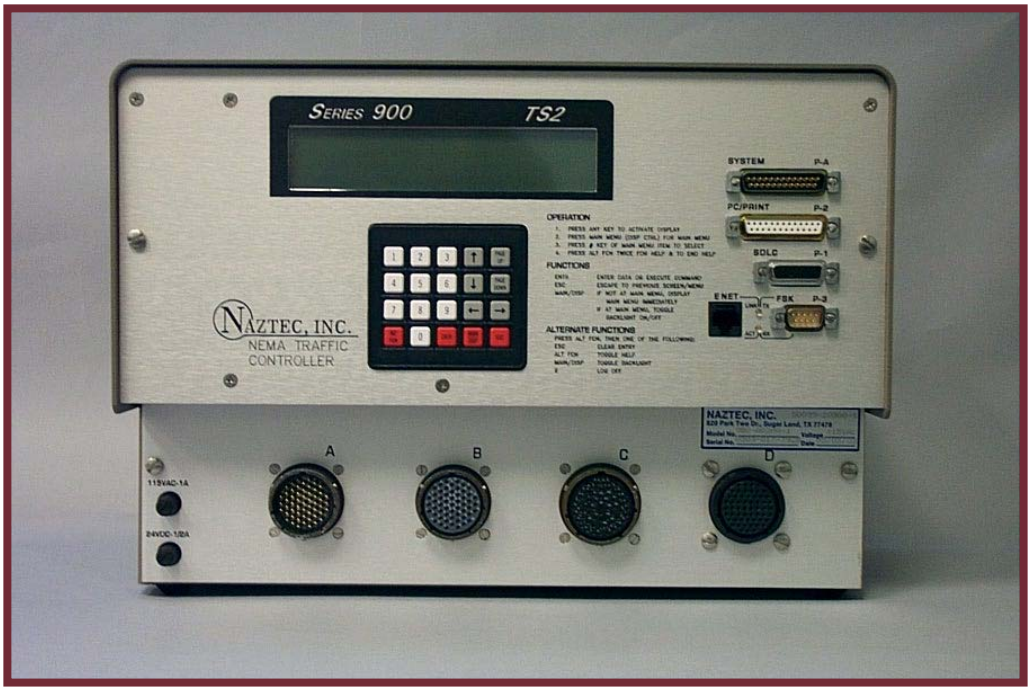

Traffic Responsive Secondary

The Model 980 NEMA Traffic Signal Secondary Controller is designed using state of the art electronics for reliability, long life, and superb performance in all signal control applications. The advanced architecture and NTCIP compliance provides the traffic engineer with a flexible platform for the future.

The Model 980 Secondary Controller meets and exceeds NEMA TS2 specifications, and includes advanced functionality for complex phasing, detector processing, coordination, preemption, communications, adaptive timing, as well as full systems operation in a closed-loop, hybrid, or centralized configuration.

The advanced LCD display and menu driven software provides a user-friendly approach to programming and access, and built-in diagnostics permit rapid evaluation of operational status. The use of Flash Memory allows software upgrades without PROM replacement. The Ethernet-enabled controller allows communication across an TCP/IP network.

820 Park Two Drive Sugar Land, TX 77478 (281) 240-7233
www.naztec.com naztec@naztec.com Additional Offices in Florida and Virginia

Naztec, Inc.
ATMS Solutions

Series 980 NEMA TS2 Type 2 Signal Controller with Ethernet

FEATURES

FLASH PROMS

The Model 980 Controller is easily configured to various firmware versions by the utilization of FLASH PROMS which eliminate the need for obsolete EPROM technology. A complete firmware update requires only ten minutes, and does not require hardware changes or EPROM replacements.

DISPLAY

A back-lighted 4-line by 40-character supertwist LCD display provides full menu screens for ease of data entry. The display maintains an optimum contrast and brightness over the entire NEMA specified temperature range, using special temperature-compensating circuitry. The menu-driven format and context sensitive help screens eliminate need for programming instructions or look-up codes.

EASILY SERVICED

The Model 980 Controller consists of only two printed circuit boards (three with optional modem) and an open frame power supply. The CPU/display board and the I/O board utilize machine tooled sockets for all integrated circuits for easy maintenance. An identification silkscreen on each circuit board clearly labels all components. No special tools or extender cards are needed for troubleshooting.

REAL-TIME CLOCK

The real-time clock maintains accurate timing by utilizing a “super capacitor” which allows accuracy of 0.005% during a 24-hour time period. Retention time during power failures for the real time clock is extendible to 30 consecutive days.

BARRIERS

Unique to the Naztec traffic controller product line is the flexibility of user programmable barriers. Four (4) separate batteries allow programming for applications from one (1) to eight (8) phases in each barrier.

KEYBOARD

A 20-position keyboard containing 4 red function keys, 6 gray cursor movement keys, and 10 white digit keys with built in audio/tactile feedback provides user-friendly enhanced data entry.

DIAGNOSTICS

Built-in diagnostics provide for improved maintenance and easier repairs. Internal diagnostics allow operator tests on all input and output signals, RAM devices, and memory. A built-in EEPROM eraser allows for a “clear-all” memory function.

COMMUNICATIONS

Two RS-232 ports and an optional FSK modem port are available with each secondary unit. These ports are keyboard programmable with selectable baud rates from 300 to 19.2K with full and half duplex options. Various communication configurations allow the user multiple interfaces to other cabinet devices: conflict monitor, preemption equipment, detectors, WWV clocks, modems, notebooks, printers, etc. A RS-485 SDLC Bus Interface Port is provided for all TS2 applications. The NTCIP protocol is fully supported.

Voltage:	89 to 135 VAC 60 HZ
Power:	30 Watts Maximum
Temperature:	-30º F to 165º F
Humidity:	0 to 95 percent
Dimensions:	Height: 10.50”
	Width: 14.75”
	Depth: 8.20”

820 Park Two Drive Sugar Land, TX 77478 (281) 240-7233
www.naztec.com naztec@naztec.com Additional Offices in Florida and Virginia

Trafficware

Engineered by Naztec

MMU 516L-E LCD with Ethernet

FEATURES

- Meets and exceeds all TS2 specifications
- High speed internal data transfer and communications via an SDLC port
- High speed external data transfer via an RS-232 or Ethernet port
- Full LCD Screen w/ Menu-Driven, Easy to Use Software
- LED indicator lamps for operation analysis
- Removable program card
- High performance machine tooled sockets for integrated circuit mounting

The **Naztec Model MMU 516L-E Malfunction Management Unit** is an enhanced MMU that monitors up to 16 traffic signal indications (channels) for conflict, improper sequencing, incorrect timing, and improper signal voltage levels. The MMU 516L-E is fully compliant with NEMA Standard TS2-2003. The MMU 516L-E is also capable of operating in older TS1 type cabinets, and is compatible with 12-channel Conflict Monitor Units conforming to the NEMA Standard TS1-1989.

All connectors, indicators, and operator controls are located on the front panel of the MMU 516L-E. Channel and control input signals and relay output connections are made through two MIL-C-26482 connectors, and the SDLC Port is an A-size, 15 contact, D shell connector. The MMU 516L-E is equipped with a 10/100 Ethernet Port and a RS232 Port, which are excellent for tracking important phase output, status, and logging data back to the controller or to a PC for logging. The programming card and the AC line fuse are easily accessed from the front panel.

The MMU 516L-E provides a Reset Timeout feature to prevent a broken switch or accidental wiring fault from holding the unit in the reset state for an extended period of time. LED indicators, in addition to the TS2 specified indicators, include Dual Indication Fault, Yellow+Red Clearance Fault, Programming Card Ajar, Field Check (active channels do not match SDLC message from controller) Fault, and LEDs for two +24VDC input faults and CVM input faults. Status indicators provided include: AC Line Power, Type 12 Indicator, SDLC Transmitter Active, and SDLC Msg Received.

For added safety, the MMU516L-E performs continuous diagnostic tests during all operating modes. All memory elements, the microprocessor, operating voltages, and critical circuitry are checked.

Trafficware

Engineered by Naztec

MMU 516L-E LCD with Ethernet

PROGRAMMING

- Minimum flash; 0-16 seconds
- Short yellow per channel
- Programmable sequence monitor
- Latch selectable options

INDICATIONS

- Conflict LED
- Red Fail LED
- 24 V-1
- 24 V-2
- Controller Voltage Monitor
- Red+Yel Clearance
- Clearance
- Diagnostics
- Port 1 Fault, Tx, Rx
- Program Card Ajar
- Indication Fail LED
- Field Check
- Power LED
- Type 12 Mode

ENVIRONMENTAL

- Operating Temperature: -34° C to +74° C
- Storage Temperature: -45° C to +85° C
- Humidity: Less than 95% non-condensing to +43° C

DIMENSIONS

- Height: 10.5 inches
- Width: 4.5 inches
- Depth: 10.9 inches

NEMA + FEATURES

- Meets and exceeds TS2-1992 Specifications
- Operates in TS1 Cabinets
- EPROM Memory
- No batteries
- Menu Driven LCD Display
- Machine tooled socket I.C.'s
- Programmable Minimum Flash Time
- Latch 24 V failures
- Latch CVM Failure
- Enhanced Monitoring
- Flashing Yellow Protected/Permissive
- 10/100 Ethernet

ELECTRICAL

Power

- Line Voltage: 75 to 150 VAC, RMS
- Line Frequency: 57 to 63 Hz, 60Hz nominal
- Power: 10 watts, typical
- Fuse, Front Panel: 0.5A Slow Blow

Monitoring Voltage

- Pickup: 96 +/- 2.5 Volts AC, RMS
- Dropout: 91 +/- 2.5 Volts AC, RMS
- Hysteresis: 4 +/- 1.0 Volts AC, RMS

SPECIFICATIONS/DATA

Traffic Signal Cabinet Bases

NEW PART NO.	OLD PART NO.	WEIGHT #	DIM. A	DIM. B	DIM. C
PB40440608B15	PB4044BA15	281 (127.0 kg)	6” (152 mm)	8” (203 mm)	15” (381 mm)
PB40440608B24	PB4044BA24	378 (171.0 kg)	6” (152 mm)	8” (203 mm)	24” (610 mm)
PB40440928B24	PB4044B503	385 (174.6 kg)	9” (229 mm)	28” (711 mm)	24” (610 mm)
PB40441218B24	PB4044B501	366 (166 kg)	12” (305 mm)	18” (457 mm)	24” (610 mm)

Refer to Traffic Signal Cabinet Base Cross Reference Guide on pages 81 - 82.

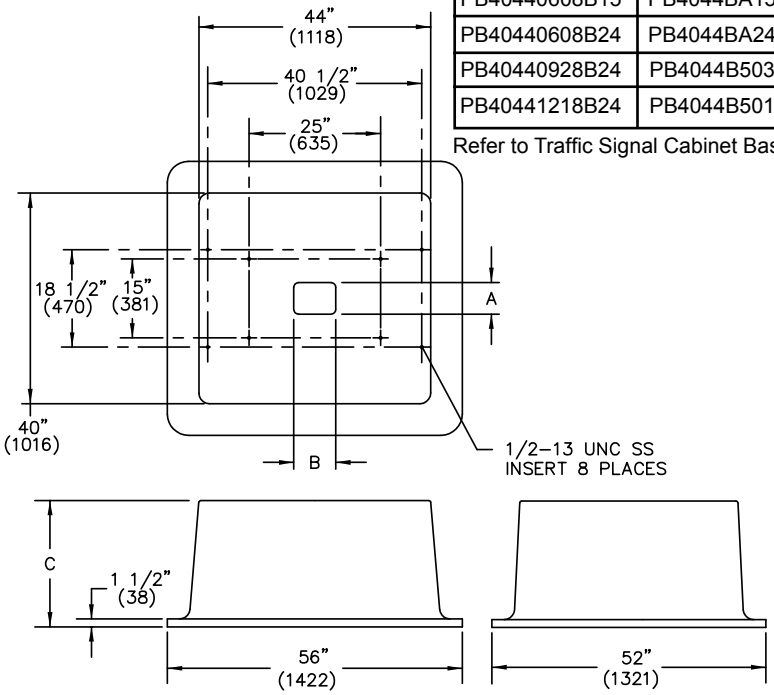

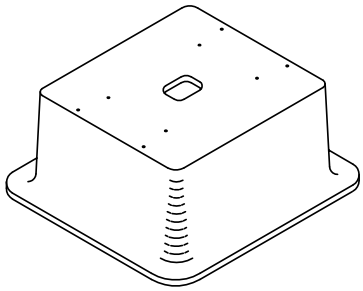

NEW PART NO.	OLD PART NO.	WEIGHT #	DIM. A	DIM. B
PB40580616B24	PB4058BA24	450 (204.1 kg)	6” (152 mm)	16” (406 mm)
PB40581224B24	PB4058B502	435 (197.3 kg)	12” (305 mm)	24” (610 mm)
PB40581024B24	PB4058B504	440 (199.6 kg)	10” (254 mm)	24” (610 mm)

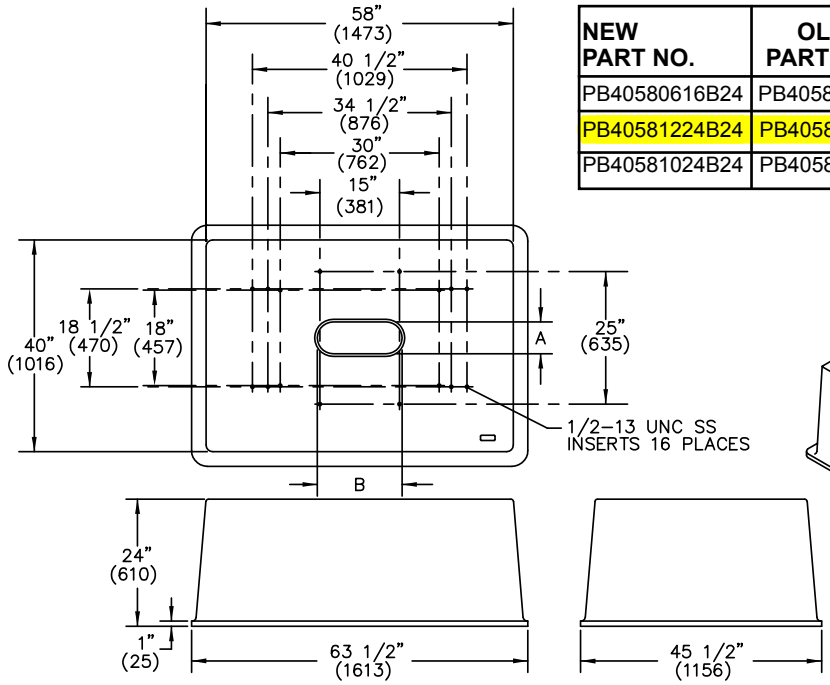

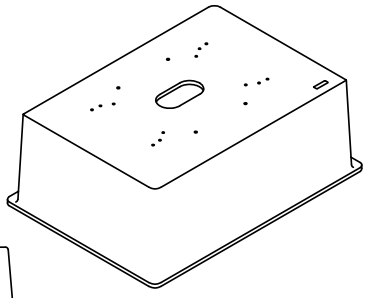

Dimensions and weights in parentheses are metric equivalent.

Information shown in catalog is a partial listing. If pad or throat size desired is not listed, contact Quazite field sales office.

AUGUST 2010

BACKPLATES
Vacuum Formed & Flat ABS

1

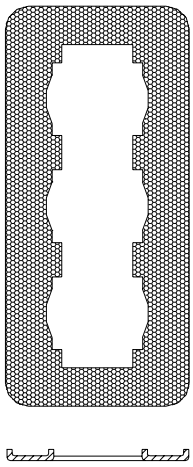

BK-1003
3-Section 12"
Trafcon or Eagle SA Signal

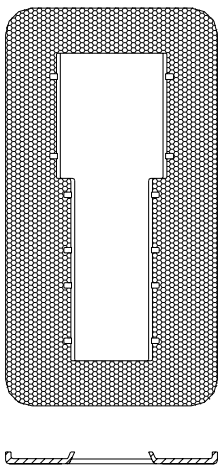

BK-1011
3-Section 12"-8"-8"
US Traffic Signal

ITEM	DESCRIPTION	PART NO.
	BACKPLATE:	
1	Vacuum Formed ABS Plastic, .125"	BK-1000 series
2	Flat ABS Plastic, .156"	BK-2000 series

Notes:

1. Backplates are fabricated from black ABS UV stabilized plastic sheet with hair cell finish on front side, smooth finish on back side, and 3" corner radii. Each are designed to precisely fit manufacturers signal head and supplied with necessary hardware.
2. Vacuum formed backplates have 5/8" flange on all sides providing greater rigidity and structural integrity.
3. Flat polycarbonate backplates are available upon request. Contact Pelco for backplate options not shown.
4. Please specify one of the following options when ordering.

2

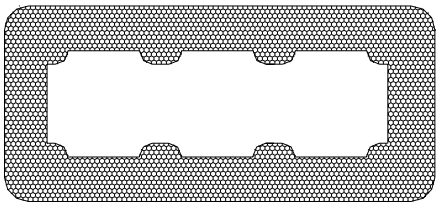

BK-2008
3-Section 12"
Trafcon or Eagle SA Signal

OPTIONS	
SIGNAL MANUFACTURER:	
Eagle Sig/Automatic (poly)	A
Eagle SA (poly)	E
Eagle/Mark IV (alum)	F
TCT	C
Trafcon	T
3M	M
McCain	N
Fortran	FT
Econolite 2002 (alum)	L4
Econolite 2002 (poly)	L3

Straight Backplates

Signal Size	No. of Sections	Vacuum Formed .125" ABS	Flat .156" ABS
8"	1	BK-1012	BK-2001
8"	2	-	BK-2002
8"	3	BK-1006	BK-2003
8"	4	-	BK-2004
8"	5	-	BK-2005
12"	1	BK-1001	BK-2006
12"	2	BK-1002	BK-2007
12"	3	BK-1003	BK-2008
12"	4	BK-1004	BK-2009
12"	5	BK-1005	BK-2010

Combination Backplates

Signal Size Combo	No. of Sections	Vacuum Formed .125" ABS	Flat .156" ABS
12"-8"-8"	3	BK-1011	BK-2012
12"-8"-8"-8"	4	-	BK-2013
12"-12"-8"-8"	4	-	BK-2014
12"-12"-8"-8"-8"	5	BK-1014	BK-2017

BACKPLATES
Vacuum Formed & Flat ABS

1

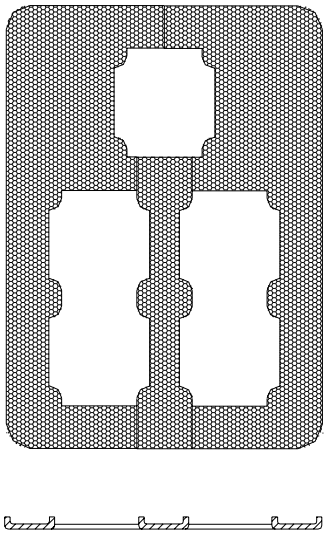

BK-1010
5-Section 12"
Traficon or Eagle SA Signal

ITEM	DESCRIPTION	PART NO.
	BACKPLATE:	
1	Vacuum Formed ABS Plastic, .125"	BK-1000 series
2	Flat ABS Plastic, .156"	BK-2000 series

Notes:

1. Backplates are fabricated from black ABS UV stabilized plastic sheet with hair cell finish on front side, smooth finish on back side, and 3" corner radii. Each are designed to precisely fit manufacturers signal head and supplied with the necessary hardware.
2. Vacuum formed backplates have 5/8" flange on all sides providing greater rigidity and structural integrity.
3. Flat polycarbonate backplates are available upon request. Contact Pelco for backplate options not shown.
4. Please specify one of the following options when ordering.

OPTIONS	
SIGNAL MANUFACTURER:	
Eagle Sig/Automatic (poly)	A
Eagle SA (poly)	E
Eagle/Mark IV (alum)	F
TCT	C
Trafcon	T
3M	M
McCain	N
Fortran	FT
Econolite 2002 (alum)	L4
Econolite 2002 (poly)	L3

2

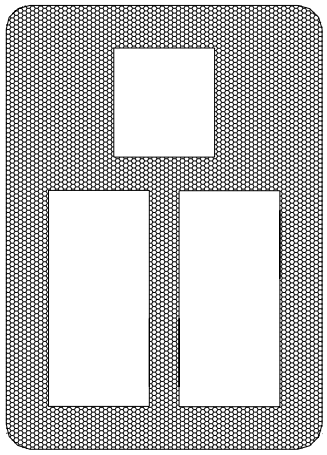

BK-2023
5-Section Cluster 12"
Econolite 2002 Signal

5-Section Cluster Backplates

Signal Size	No. of Sections	Vacuum Formed .125" ABS	Flat .156" ABS	Mounting Application
12" / 12" 12" / 12" 12"	5	BK-1007	BK-2011	Astro-Brac 16" CTC
12" / 12" 12" / 12" 12"	5	BK-1010	BK-2023	Span Wire 16½" CTC
12" / 12" 12" / 12" 12"	5	BK-1021	BK-2024	Span Wire Casting 17" CTC
12" / 12" 12" / 12" 12"	5	BK-1015	-	Plumbizer Mount 17" CTC

320 W. 18th St., Edmond OK 73013 • 405-340-3434 • FAX: 405-340-3435 • E-mail: pelco@pelcoinc.com • www.pelcoinc.com

Traffic Signals

GELcore provides state-of-the-art LED solutions for the conversion of incandescent signals. Installation of LED Signals can offer significant savings in operating and maintenance costs resulting in a quick return on initial investment.

GELcore signal module features include:

- High-efficiency and long life LED light source
- Patented optical design
- UV stabilized shell
- Robust, air tight, weatherproof design
- Designed to conform to global standards
- Products available in 120V-AC, and 240V-AC
- Designed for direct retrofit or OEM application

GELcore offers signals for traffic applications across the world. Search for a regional distributor near you.

Spec Sheets

North America

- 8" Full Ball (RX11)
- 12" Full Ball (RX11)
- 12" Arrow (RX11)
- 8" Expanded View (RX11)
- 12" Expanded View (RX11)
- 12" Expanded View
- PV Signal
- Iluminated Street Sign
- 12"x12" Ped Module

Spec Sheets

Europe

- English - 230V, RX11
- Francais - 230V, RX11
- Nederlands - 40V, RX11
- Deutsch - 230V, RX11
- Italiano - 230V, RX11
- Espanol - 230V, RX11
- Scandinavia - 230V, RX11
- Nederlands - Waterway -40V

Australia

- 200 & 300 mm Modules - 230V

Related Items

- Pedestrian Control
- Rail & Transit
- Energy Star
- Where To Buy
- Payback Calculator

- 16"x18" Ped Module
- Ped Countdown Module

All above files are Adobe Acrobat PDF's. If you do not have Adobe Acrobat you may download it for free from Adobe

- 200 & 300 mm Arrows - 230V
- 200 mm Ped, Bike, Bus - 230V

All above files are Adobe Acrobat PDF's. If you do not have Adobe Acrobat you may download it for free from Adobe

• P: 216.606.6555 • F: 216.606.6599 • E: info@gelcore.com

GE LED Solutions

Privacy Policy | Terms and Conditions | © GELcore 2000-02

Signal Covers

Motorists Understand Signal Covers from Traffic Sign & Signal Cover Concepts™

Plastic

- Eliminate motorists' confusion. Send a clear message!
- Avoid haphazard, messy, torn or blown away coverings!
- Reduce workers' exposure to traffic risks with quick & simple installation and removal!
- Improve road and highway work zone appearance!
- Improve safety for motorists, pedestrians and workers!
- Reduce pollution and waste with reusable covers that stay intact!

Cardboard

Cover By TSSCC

- TSSCC signal covers are easy to install!
- Save time and money!
- Increase safety in highway construction and maintenance zones.
- Reduce liability risk of contractor and government.
- Less expense, labor and hassle than making covers!
- Vented cover makes RingOut/Testing easy!

Pedestrian Crossing Head Covers

"Make-Shift Cover"

- **Replace, ugly, messy looking "make-shift" covers with low cost covers from TSSCC!**
- **Pedestrian crossing head covers from TSSCC improve pedestrian safety and look clean and professional while conveying a clear meaning!**

Cover By TSSCC

Traffic Sign & Signal Cover Concepts™
A division of Pacific Innovation Enterprises (PIE)
P.O. Box 2592
Mission Viejo, CA 92690

Phone/Fax: (949) 215-7747
Email: info@trafficsignsignalcover.com

here for privacy policy.

Webmail

SPECIFICATIONS
REINFORCING COLLAR FOR SQUARE BASE

REQUIREMENTS: Reinforcing collar shall be a three segment assembly designed to retro-fit onto an existing square cast aluminum or iron pedestal base.

The purpose for the collar is to reinforce a pedestal shaft at the point where the threads enter the base. Use of the collar will move the stress point to the area immediately above the collar. This area maintains the strength of a full wall thickness and provides greater movement ability.

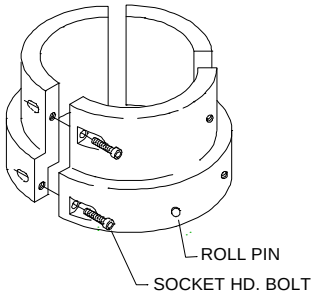

Figure 1

MATERIAL: Reinforcing collar shall be three-piece cast aluminum with the minimum requirements:

Aluminum Alloy	713
Tensile Strength, KSI	32
Yield Strength, KSI	22
Elongation (% in 2")	3
Brinell Hardness	70
Minimum Wall Thickness	5/8"
Minimum Overall Height	4-3/8"

INSTALLATION: The collar shall be clamped around the top of a pedestal base by the use of two (2) 5/16" Socket Head Bolts per segment (Figure 1). Each segment shall have a 5/16" pilot hole for drilling through base. A 5/16" x 3/4" Roll Pin shall be driven through the collar into the base until flush to prevent the collar from *walking* up the base.

HARDWARE: (6) 5/16"-18 x 1½" Socket Head Capscrews
(3) 5/16" Dia. x 3/4" Roll Pins

FINISH: Collar Segment: Alodine 1200
Fasteners: Zinc w/ Yellow Di-Chromate

SPECIFICATION - SQUARE ALUMINUM TRAFFIC SIGNAL BASE

PHYSICAL REQUIREMENTS:

Square cast aluminum with natural finish, minimum weight of 21 lbs. with dimensions as shown in figure 1.

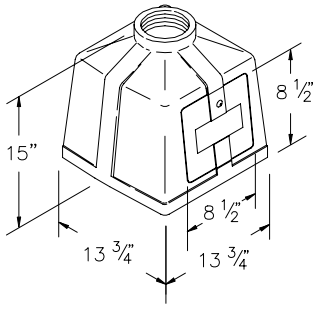

Figure 1

Upper end shall be threaded to receive a 4" NPT pipe shaft. Base threads shall be tapped to allow full pole engagement w/o exposed threads on the pole.

Shall be of such design that it may be fastened to a foundation with four (4) 3/4" anchor bolts located 90 degrees apart on the bottom of the base. There shall be slots in the bottom of the base 1½" wide and 2½" long measured along the circumference of the bolt circle, allowing a proper fit even if the bolts are placed slightly off center.

Shall accommodate bolt circles of a minimum of 12" through a maximum of 14½" and anchor bolts with a minimum of 5/8" through 1" diameter.

Shall be equipped with a removable plastic door. Door opening shall be free of burrs and sharp edges and be no less than 8½" square. The door shall be attached to the Base using one stainless steel socket button head screw to prevent unauthorized entry.

Shall be fabricated free of voids, pits, dents, molding sand and excessive foundry grinding marks. All design radii shall be smooth and intact. Exterior surface finish shall be smooth and cosmetically acceptable by being free of molding fins, cracks and other exterior blemishes.

Shall be fabricated from new aluminum ingot. No scrap materials shall be used. Minimum requirements as follows:

Aluminum Alloy 319	Elongation (% in 2") 2
Tensile Strength, KSI..... 27	Brinell Hardness..... 70-100
Yield Strength,KSI 18	

STRUCTURAL REQUIREMENTS:

FRANGIBILITY: The base shall meet or exceed 1985 AASHTO breakaway requirements. Test reports from an FHWA approved independent laboratory shall be provided certifying that the base has been tested and meets all applicable requirements. In addition, a statement of certification from the FHWA stating such tests have been accepted and approved shall be supplied.

STRUCTURAL INTEGRITY: In order to prove structural soundness a certification from a recognized independent structural laboratory shall be provided certifying that the base will withstand a bending moment of 10,750 ft. lbs. Such test shall be performed in the following manner:

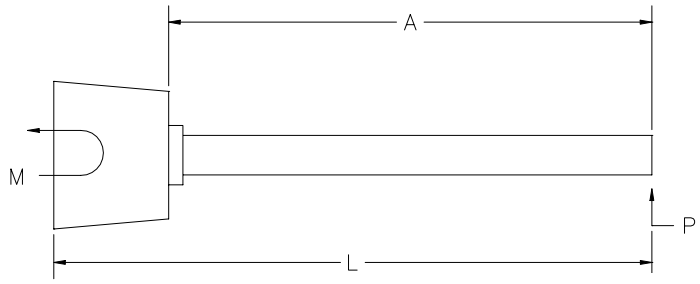

Figure 2

A force (P)(Fig. 2) shall be applied at a distance (L) from the bottom of the base in order to produce a moment (M). All bases must reach a moment capacity of 10,750 ft. lbs. without breaking, cracking or rupturing in any manner.

After force (P) has been removed, the lever arm (A) shall return to within .250" of its original rest position.

All tests shall be made using 4" Schedule 40 Steel Pipe.

DOOR REQUIREMENTS:

Door shall be injection molded from ABS plastic to deter vandalism and theft and having the following properties:

	ASTM Method	VALUE
Tensile @ yield (1/8")	D638	6600 PSI
Flexural @ yield	D790	11,000 PSI
Rockwell Hardness	D785	101 (R Scale)
Notched Izod	D256	5 ft. lb./in.

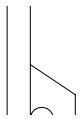

Figure 3

The door shall exhibit the following properties:

Have an edge thickness of ¼" and a minimum thickness of 5/32".
Contain flame retardant, meeting or exceeding Underwriters Laboratories UL 94 Test H.B.
Color shall be gray aluminum tone unless otherwise specified.
Contain ultra-violet inhibitors and stabilizers for protection against U.V. degradation.
Shall be injection molded with a smooth front finish.
All surfaces shall be flat and straight without blisters, buckling or warping.
Shall have reinforcing ribs. The bottom of the door shall have 2 injection molded lugs with slots of the proper width and depth to fit the base door opening. (Fig. 3)

HARDWARE:

When specified, the base shall be supplied with a set of 4 Anchor Bolts, 3/4" Dia. by 18" length, material per ASTM A-572, galvanized per ASTM A-153. Each Bolt shall have (1) Hex. Nut and (1) Flatwasher.

Single-Phase, Three-Wire, 120/240 Vac; Main Lugs – Rainproof

Mains Rating in Amps	Load Center Catalog Number	Load Center Cover Catalog Number ★	UL Listed Service Equipment (See Notes)	Maximum UL Short Circuit Rating ◆	Main Wire Size AWG/kcmil Al/Cu	Enclosure No.	Top or Bottom Mains Position	UL Listed for Corner Grounded Delta Systems
Fixed Mains – Factory-Installed Main Lugs								
40	QO2L40RB	Included	B	10,000 A	#12–6 #14–10	1R	Top	No
70	QO24L70RB	Included	B	10,000 A	#12–3 #14–4	1R	Top	No
100	QO612L100RB	Included	B, C	10,000 A	#8–1	2R	Top	No
	QO612L100TRB	Included	B, C	10,000 A	#8–1	2R	Top	
	QO612L100RBCU	Included	B, C	10,000 A	#8–1	2R	Top	
100	QO816L100RB	Included	B, C	10,000 A	#8–1	2R	Top	No
	QO816L100RBCU	Included	B, C	10,000 A	#8–1	2R	Top	
125	QO148L125GRB	Included	B, C	10,000 A	#4–2/0	15R	Top	No
Convertible Mains – Factory-Installed Main Lugs **QOM1 Main Frame Size – Convertible to Main Circuit Breaker – Copper Bus**								
125	QO112L125GRB	Included	B, C	65,000 A■ ▲	#4–2/0	3R	Top	Yes
	QO11224L125GRB	Included	B, C	65,000 A■ ▲	#4–2/0	3R	Top	
	QO11624L125GRB	Included	B, C	65,000 A■ ▲	#4–2/0	4R	Top	
	QO124L125GRB	Included	B	65,000 A ■	#4–2/0	4R	Top	
Convertible Mains – Factory-Installed Main Lugs **QOM2 Main Frame Size – Convertible to Main Circuit Breaker – Copper Bus**								
150	QO130L150GRB	Included	B, C	65,000 A■ ▲	#4–250	6R	Top	Yes
200	QO112L200GRB	Included	B, C	65,000 A ■	#4–250	5R	Top	Yes
	QO130L200GRB	Included	B, C	65,000 A ■	#4–250	6R	Top	
	QO13040L200GRB	Included	B, C	65,000 A■ ▲	#4–250	6R	Top	
225	QO142L225GRB	Included	B	65,000 A ■	#4–300	8R	Top	Yes

★ Convertible mains load center has a side-hinge door. Allow 1.25 in. (32 mm) on the left side for the door to open.
◆ Short circuit current rating depends on lowest AIR rating of main or branch circuit breaker installed.
▲ 22,000 A rms symmetrical maximum when supplied by integral type QOMVH main circuit breaker from Square D with 22,000 A rms symmetrical minimum interrupting rating and when all QO installed branch circuit breakers have 10,000 A rms symmetrical minimum interrupting rating.
■ UL Listed at 5000 A rms symmetrical short circuit current rating when used in 3-phase, corner grounded, Delta systems, when used as main lugs load center **only**. Use 240 Vac circuit breakers only.
B UL Listed as suitable for use as service equipment (neutral bonded at the time of installation) with field-installed service disconnect.
C UL Listed as suitable for use as service equipment (neutral bonded at the time of installation) when not more than six service disconnecting means are provided and when not used as a lighting and appliance branch circuit panelboard. See NEC Section 384-14.

© 2000 Schneider Electric All Rights Reserved

Roadway Sensors

Vantage Edge®2

[A machine vision processor that delivers superior performance in adverse weather conditions]

The Vantage Edge2 processor is a key component in the family of Vantage video detection solutions. The module combines state-of-the-art technology with sophisticated algorithms to deliver dependable vehicle detection required for today's complex transportation systems. The Edge2 processor features single, dual or quad video inputs to maximize configuration efficiencies for intersection control, highway monitoring and ramp metering flow control applications.

The processor module is complimented by multiple Input/Output and Extension Modules that provide flexible and expandable solutions to meet the needs of larger and more complex intersection configurations. The Edge2 processor module and its associated expansion modules fit into standard detector racks to simplify installation and setup. All modules are designed as a simple and cost-effective replacement for the inductive loop amplifier module configuration.

Optionally, all processor and output detector cards can be inserted into the Vantage rack system allowing for greater flexibility over individual configurations and for better operational control.

The Edge2 processor and all of its associated modules can be completely configured by using a mouse and video monitor only, eliminating the need for expensive laptops or PDA devices.

Installation and Configuration

The Edge2 processor card is hot swappable and is easy to set up and configure. All you need is a mouse to configure virtual zone operation for intersection, highway monitoring or ramp metering operations. Configuration is performed through the user-friendly menu system built in to the Edge2 processor. Virtual zones can be configured for presence, delay, extension, or count functions. Count, Speed, Occupancy (CSO) detection zones provide traffic count, speed, occupancy, and classification data. Incident detection zones can be set up to identify slow moving or stopped vehicles, vehicles traveling in the wrong direction, highway congestion or other customized event conditions. Data is stored in the processor that can be retrieved using the Vantage Remote Access Software (VRAS).

All Vantage processor and output modules interface directly with NEMA TS-1 and TS-2, Type 170/2070 ATC controllers and cabinet wiring schema.

Features

- Available in single dual or quad video inputs
- Extension modules in 2, 4 or 32 channel configurations
- Fits into Type 170/2070 input files, NEMA TS-1 and TS-2 detector racks
- Easy to use menu interface
- Need only a mouse and monitor to configure
- Auto senses input voltage (+12 or +24 VDC)
- High intensity LEDs for easier viewing of status conditions
- Up to 24 virtual zones per video input
- Up to 24 outputs per video input
- Virtual zones can be assigned with Boolean logic for greater control
- Fail-safe outputs for video loss, low contrast and equipment failure
- Non-volatile memory data storage
- Self test on power up
- RS-232 serial port for ease of remote access and maintenance

ITERIS® Innovation for better mobility

EdgeConnect™

[Quad-view remote communications module]

The EdgeConnect is a unique "technology first" product that enhances connectivity between systems in the field and a remote management system.

Iteris' EdgeConnect quad-view remote communications module provides both local and remote management of data and video over Ethernet — enabling system operators to manage their Vantage® video detection systems more efficiently and effectively by allowing the user to view real-time video.

The EdgeConnect's advanced MPEG4/H.264 video compression ability minimizes bandwidth usage, and is scalable to fit the bandwidth available.

In addition, the EdgeConnect provides the ability to view up to four camera feeds through a single connection, enabling the user to quickly review the operation of an entire intersection on one screen.

By allowing a single EdgeConnect to serve as a communication hub for up to four Edge2 processors, field installation is fast and easy.

Technical Specifications

Connections	4 BNC connectors for video input (via DB15 spider cable)
	4 RJ45 Edge2 Extension Module interface
	1 RJ45 Ethernet connector
	1 EIA-232 local access port
	USB mouse port
	1 BNC composite video out connector
Mechanical	
Size	7.0" long, 4.5" high, 2.3" wide (17.8 cm long, 11.4 cm high,
	5.8 cm wide)
Weight	0.64 lbs. (0.29 kg)
Environment	
Temperature	-35° F to +165° F (-37° C to +74° C)
Humidity	0% to 95% non-condensing
Vibration	0.5G, 3 axes, 5-30 Hz
Shock	10G in all 3 axes
Electrical	12/24 VDC

Benefits

- Quickly review the operation of an entire intersection on one screen
- MPEG4/H.264 video compression ability is scalable to fit the bandwidth available
- Plug and play operation enables use of existing detector rack, minimizing the need for reconfiguring controller cabinet
- Simple to use interface reduces training time and improves productivity levels
- Ease of set up and remote access reduces time and cost of installation and maintenance of equipment

Features

- MPEG4/H.264 video compression
- Plugs into any standard detecter rack that provides 12 or 24 volts DC
- Accommodates up to four video source inputs
- Accommodates up to four expansion devices
- 10/100 Base-T Ethernet port
- Web browser set up and support
- USB and trackball mouse support
- EIA-232 serial communications port
- High intensity LED status indicators

ITERIS® Innovation for better mobility

TÜV ESSEN ISO 9001

Information furnished by Iteris is believed to be accurate and reliable. However, Iteris does not warranty the accuracy, completeness, or fitness for use of any of the information furnished. No license is granted by implication or otherwise under any intellectual property. Specifications subject to change without notice.

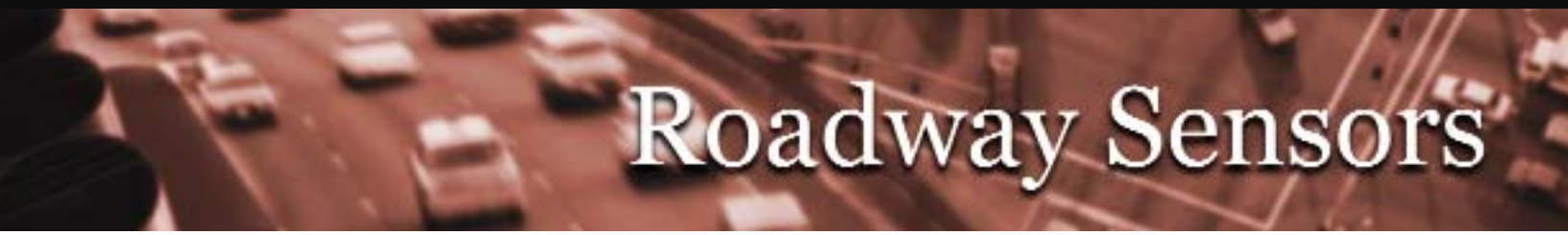

Benefits

- Plug and play operation enables use of existing detector rack thereby extending the life of the con troller and cabinet equipment
- Simple to use interface reduces training time and improves productivity levels
- Ease of set up and minimal lane closure time reduces manpower cost and keeps traffic flowing during equipment installation
- Expandable and modular system allows for optimal configuration that helps to reduce cost while preserving room for incremental growth

Typical Applications

- Intersection flow control
- Ramp metering
- Traffic data collection
- Bicycle detection
- Traveler information system input
- Temporary and construction zone vehicle detection replacement
- Moving or wrong way motion detection
- Automatic Incident Detection (AID) in tunnels and on bridges

Vantage Family Products

- Machine Vision Processor modules
- Input and Output Extension modules
- Communications modules
- Flexible and expandable detector rack systems
- Cameras optimized for video detection applications

Technical Specifications

Power	• 12 or 24 VDC, 7W maximum
	• Consumption
	▪ @12VDC - 490mA
	▪ @24VDC - 280mA
Video	• Input type
	▪ NTSC, PAL
	▪ 75Ohm 1 Vpp
	• 1 input channel
	▪ Single BNC connector
	• 2 input channel
	▪ Dual BNC connector
	• 4 input channel
	▪ DB15 video input connector (cable supplied)
	• Output – All models
	▪ Single BNC connector
Communications	• RS-232 serial port
	• USB port for pointer control
Detector I/O	• Outputs (open collector +24VDC nominal 50mA)
	▪ 4 on rear edge of module
	• Inputs
	▪ 4 on rear edge of module
Status Indicators	• 4 LEDs indicate output detection state
	• 4 LEDs indicate video source
Environmental	• -35°F to +165°F (-37°C to +74°C)
	• 0% to 95% humidity non-condensing
	• 0.5G, 3 axes, 5-30Hz vibration tested
	• 10G in all 3 axes for shock testing
Mechanical	• 7" L x 4.5" H x 2.31" W. (17.78cm x 11.43cm x 5.86cm)
	• 0.8lb (.363Kg)
Warranty	• 3 years limited warranty
Regulatory	• NEMA TS-2 compliant
	• FCC part 15, Class A

ITERIS® Innovation for better mobility

TÜV ESSEN ISO 9001

Information furnished by Iteris is believed to be accurate and reliable. However, Iteris does not warranty the accuracy, completeness, or fitness for use of any of the information furnished. No license is granted by implication or otherwise under any intellectual property. Specifications subject to change without notice.

Roadway Sensors

RZ-4 Advanced™ WDR

[Advanced video detection enhanced with Wide Dynamic Range Technology]

The RZ-4 Advanced WDR (RZ-4 AWDR) is Iteris' premium video detection camera. Optimized for traffic video detection, the RZ-4 AWDR combines Iteris' best-in-class all-weather performance video detection with Wide Dynamic Range (WDR) technology – using the advanced imager technology to handle extremes in light and dark and severe glare conditions. In harsh backlit conditions, vehicles can be detected with >100dB of dynamic range; the camera can handle the most complicated scene. The RZ-4 AWDR's simple installation, backward compatibility, and the power to adjust the camera from the cabinet provides an advanced, easy-to-use solution for video vehicle detection.

The RZ-4 AWDR detects vehicles in any lighting and weather conditions. In contrast to other CCTV type cameras, the RZ-4 AWDR delivers a video signal that is optimized for processing by the Vantage video detection systems.

Using 'quick-click' connectors, the RZ-4 AWDR streamlines the installation process. No crimping tools are required – only wire stripping tools and a screwdriver are needed to install and terminate the camera cables. In addition, the RZ-4 AWDR is backwards compatible with existing cameras in the field. Simply cut the existing cables and connectors, strip the power and coax cables, terminate with a standard screwdriver, and click the connector into the back of the RZ-4 Advanced camera.

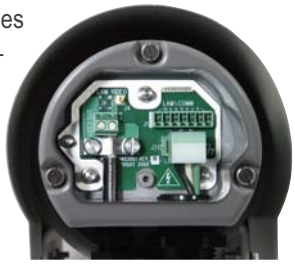

The back of RZ-4 Advanced

The RZ-4 AWDR camera also gives technicians the option to set up the field of view (FOV) from the bucket truck or from the ground at the cabinet. Technicians can use Iteris' Lens Adjustment Module (LAM) with an adaptor harness to setup and configure the camera at the mounting point OR use an adaptor box connected to your existing LAM to set up and configure the camera FOV from the ground.

RZ-4 AWDR's camera assembly is sealed in a weather-tight enclosure specifically designed for outdoor use. To prevent sun glare and to protect the housing from the weather elements, the RZ-4 AWDR is fitted with a moveable sunshield to allow the camera to be pointed in any direction. The sunshield extends beyond the front of the camera housing to protect the housing glass from rain and glare that could hinder the view of the camera. Also, to prevent the buildup of condensation or ice on the lens glass, the camera housing is fitted with an advanced heater that ensures a clear view at all times.

Benefits

- Specifically designed for vehicle detection applications
- Optimized to work with Iteris' advanced detection algorithms
- Improved color and clarity of the video image, ideal for connection to an Edge*Connect*™
- Quick-click connectors and adjustable camera mount streamline installation and minimize setup time – **no crimping tools required**!
- Set up and configure at the camera or from the ground
- Cable termination located at the rear of the camera simplifies cable connection
- Performs in the most challenging lighting conditions
- Advanced heater enables optimal video detection performance in adverse weather conditions.

ITERIS® *Innovation for better mobility*

CAMERA MOUNTINGS
Astro-Brac®

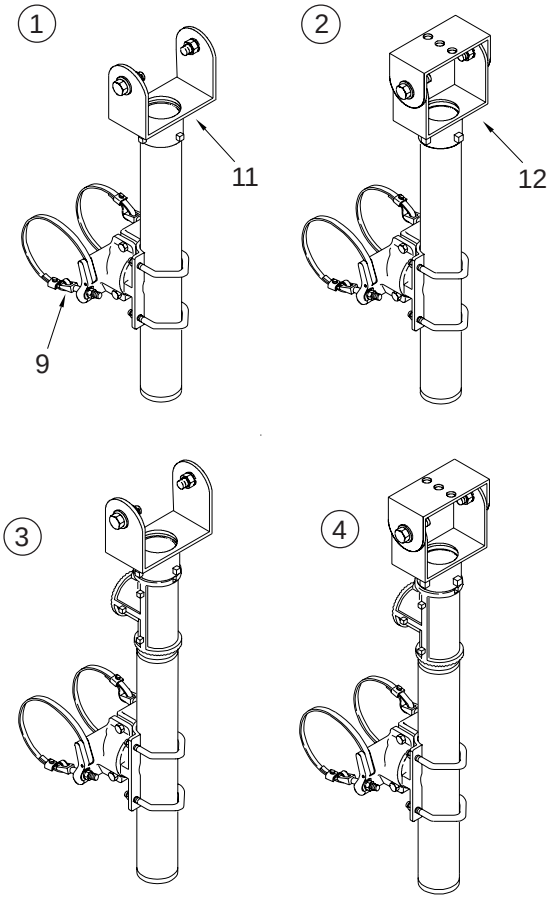

ITEM	DESCRIPTION	PART NO.
	VIDEO DETECTION CAMERA BRACKET Extended Tilt & Pan, Stellar Series:	
1	Band Mount, 1-Piece	AS-0170
2	Band Mount, 2-Piece	AS-0172
3	Band Mount w/ Service Wire Outlet, 1-Piece	AS-0177
4	Band Mount w/ Service Wire Outlet, 2-Piece	AS-0173
5	Cable Mount, 1-Piece	AS-0175
6	Cable Mount, 2-Piece	AS-0169
7	Cable Mount w/ Service Wire Outlet, 1-Piece	AS-0166
8	Cable Mount w/ Service Wire Outlet, 2-Piece	AS-0164
	ASTRO-BRAC CLAMP KIT, Stellar Series:	
9	Band Mount	AS-3004
10	Cable Mount	AS-3009
	CAMERA MOUNTING BRACKET:	
11	1-Piece, Alum.	SH-0514
12	2-Piece, Alum.	SH-0515

Notes:

1. All assemblies are supplied standard with stainless steel fasteners. Stainless steel upgrade shall include stainless clamp screw kit where applicable.
2. 1-piece bracket for mounting Iteris, Odetics, or Econolite Solo Pro type cameras. 2-piece bracket for mounting Burle type cameras.
3. Please specify options when ordering.

ITEM 1-4 OPTIONS
TUBE LENGTH: 23", 37", 46", or 74"
BAND LENGTH: 29", 36", 42", 48", or 56"
STAINLESS UPGRADE
PAINT

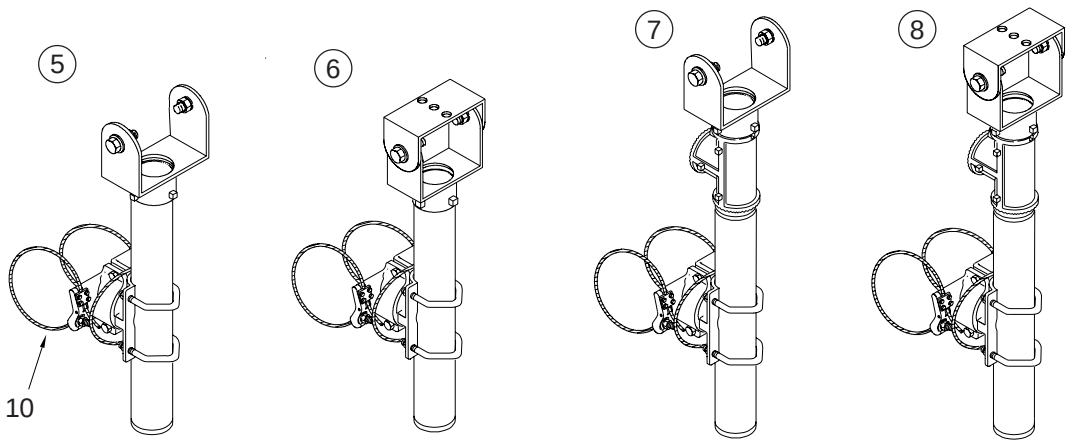

ITEM 5-8 OPTIONS
TUBE LENGTH: 23", 37", 46", or 74"
CABLE LENGTH: 62", 84", or 96"
PAINT

320 W. 18th St., Edmond OK 73013 • 405-340-3434 • FAX: 405-340-3435 • E-mail: pelco@pelcoinc.com • www.pelcoinc.com

Typical Layout of Conduit & Pull Box

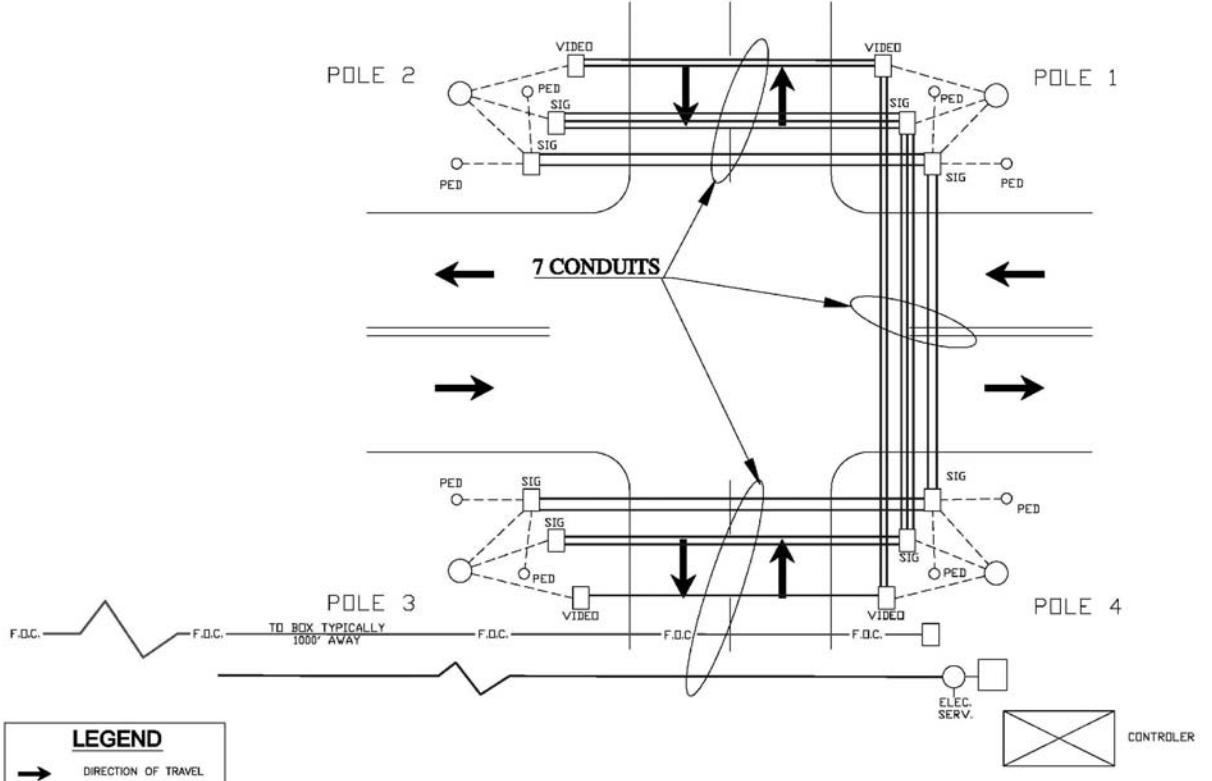

FOR INFORMATIONAL PURPOSES ONLY.

REVISION DATE :			SIGNALIZATION CONDUIT TYPICAL LAYOUT	DRAWING NO.
				SHEET NO. OF
				DWG FILE NAME: